Eleventh Edition

February 2002
Revised August 2002

Savannah District Design Manual for Military Construction

Volume II of II - Technical, Cost Estimating and Value Engineering Requirements

US Army Corps of Engineers
Savannah District
P.O. Box 889 Savannah, Georgia
31402-0889

VOLUME II

TECHNICAL, COST ESTIMATING, AND VALUE ENGINEERING REQUIREMENTS

ENGINEERING DIVISION

TABLE OF CONTENTS

PART A
DESIGN BRANCH
AND COST ENGINEERING BRANCH

PART B
GEOTECHNICAL BRANCH

PART C
VALUE ENGINEERING

TABLE OF CONTENTS

PART A - DESIGN BRANCH AND COST ENGINEERING BRANCH

PREFACE DESIGN BRANCH AND COST ENGINEERING BRANCH

CHAPTER A-1 SITE DEVELOPMENT

CHAPTER A-2 STRUCTURAL

CHAPTER A-3 ARCHITECTURAL

CHAPTER A-4 MECHANICAL

CHAPTER A-5 ELECTRICAL POWER, LIGHTING, GROUNDING, COMMUNICATIONS AND ALARM SYSTEMS

CHAPTER A-6 FIRE PROTECTION

CHAPTER A-7 ENERGY ANALYSES, ECONOMIC ANALYSES, CONTROL SYSTEMS, EMCS

CHAPTER A-8 ENVIRONMENTAL

CHAPTER A-9 COST ESTIMATES

CHAPTER A-10 DRAWINGS

CHAPTER A-11 SPECIFICATIONS

CHAPTER A-12 ASBESTOS IDENTIFICATION AND REMOVAL

CHAPTER A-13 LEAD HANDLING AND REMOVAL

CHAPTER A-14 SUSTAINABLE DESIGN

CHAPTER A-15 INTERIOR DESIGN

PART B - GEOTECHNICAL BRANCH

CHAPTER B-1 GEOTECHNICAL

CHAPTER B-2 SOILS

PART C - VALUE ENGINEERING

CHAPTER C VALUE ENGINEERING

DESIGN BRANCH AND COST ENGINEERING BRANCH

INDEX

Para. No.	Title	Page No.
1.1	GENERAL	A-0-1
1.2	COST ENGINEERING BRANCH	A-0-1
1.3	COORDINATION	A-0-1

PREFICE

DESIGN BRANCH AND COST ENGINEERING BRANCH

1.1 **GENERAL**. Design Branch is responsible for the performance of all design and design related activities in the areas of site development, architectural, electrical, energy, environmental, mechanical and structural design. The Engineering Management Branch consists of two technical support sections which are responsible for drafting quality, specifications preperation and the technical management support to the design effort. The sections within the Engineering the chapters of this volume for which they are responsible are:

Site Development (SASEN-DG)	Chapter A-1
Structural (SASEN-DS)	Chapter A-2
Architectural (SASEN-DA)	Chapter A-3
Mechanical (SASEN-DM)	Chapter A-4
Electrical (SASEN-DE)	Chapter A-5
Fire Protection (SASEN-DM/F)	Chapter A-6
Energy Analysis (SASEN-DM/C)	Chapter A-7
Environmental (SASEN-DG)	Chapter A-8
Cost Engineering (SASEN-C)	Chapter A-9
Drawings (SASEN-EC)	Chapter A-10
Specifications (SASEN-ES)	Chapter A-11
Asbestos Abatement (SASEN-GH)	Chapter A-12
Lead Handling and Removal (SASEN-GH)	Chapter A-13

Sustainable Design (SASEN-D) Chapter A-14

Interior Design (SASEN-DA) Chapter A-15

1.2 **COORDINATION**. While some direct contact between the A/E designer and Corps design team members may be necessary, all communications should flow through the Project Engineer or Project Manager. In cases where direct contact is needed, a phone conversation record shall be made and copy furnished to the respective project manager. A/E shall not be directed to do work outside contract scopes of work.

NEXT

CHAPTER A-1

SITE DEVELOPMENT

INDEX

1.1 GENERAL
- 1.1.1 Scope of Work
- 1.1.2 Specific Requirements

1.2 APPLICABLE PUBLICATIONS
- 1.2.1 Army/Air Force Basic References
- 1.2.2 Department of the Army Technical Manuals (TM's)/Air Force Manuals (AFM's)
- 1.2.3 Huntsville Division Design Manuals for Ranges
- 1.2.4 Military Standards

1.3 CODE 3 DESIGN REQUIREMENTS

1.4 PRECONCEPT SUBMITTAL REQUIREMENTS
- 1.4.1 Requirements for Site Surveys
- 1.4.2 10 Percent Design Submittal Requirements

1.5 CONCEPT OR EARLY PRELIMINARY (35 PERCENT) DESIGN SUBMITTAL REQUIREMENTS
- 1.5.1 Concept Design Analyses
- 1.5.2 Concept Design Drawings
- 1.5.3 Outline Specifications
- 1.5.4 Estimated Sitework Quantities
- 1.5.5 Survey Data
- 1.5.6 Additional Information

1.6 PRELIMINARY (OVER THE SHOULDER) DESIGN SUBMITTAL REQUIREMENTS

1.7 PRELIMINARY (60 PERCENT) DESIGN SUBMITTAL REQUIREMENTS
- 1.7.1 Preliminary Design Analyses
- 1.7.2 Preliminary Design Drawings
- 1.7.3 Outline/Draft Project Specifications
- 1.7.4 Preliminary Sitework Quantities and Unit Price Schedule(s)
- 1.7.5 State Erosion Control Plan

1.8 FINAL (100 PERCENT) DESIGN SUBMITTAL REQUIREMENTS
- 1.8.1 Final Design Analyses
- 1.8.2 Final Design Drawings
- 1.8.3 Final Draft Project Specifications
- 1.8.4 Final Sitework Quantities

1.9 CORRECTED FINAL DESIGN SUBMITTAL REQUIREMENTS
- 1.9.1 Corrected Final Design Analyses

1.9.2 Corrected Final Design Drawings
1.9.3 Corrected Final Project Specifications and Sitework Quantities

1.10 REQUIREMENTS FOR DESIGN/BUILD RFP PACKAGES

1.11 MISCELLANEOUS DESIGN REQUIREMENTS FOR SITE DEVELOPMENT
1.11.1 Engineering Manuals
1.11.2 Earthfill Borrow or Waste Materials
1.11.3 Disposal of Existing Pavements
1.11.4 Estimated Sitework Quantities and Unit Price Schedule
1.11.5 Special Instructions for Designing a Large Building Complex, Major Road Network or Airfield Pavements
1.11.6 Landscaping
1.11.7 Erosion Control

1.12 DISTRICT GUIDE SPECIFICATIONS FOR SITE DEVELOPMENT
1.12.1 Index of Guide Specifications for Military Construction (Army & Air Force)

EXHIBITS

CHAPTER A-1

SITE DEVELOPMENT

1.1 GENERAL.

1.1.1 Scope of Work. This chapter states criteria requirements and guidance for the site development portion of the project's civil design. Site development includes all proposed site improvements, excluding utilities other than storm drainage, installed outside the 1.5 m line of the building(s) or structure(s). These improvements include, but are not limited to: demolition/removal and salvage; clearing and grubbing; site grading, paving, and storm drainage; grassing; erosion control; fencing; and landscaping, when required. When required, the landscaping design shall be comprehensive and be coordinated with pertinent aspects of the overall site development, including user requirements and the architecture of adjacent existing and proposed structures. The site development will be accomplished in accordance with appropriate technical requirements contained herein, and pamphlets and other basic criteria referenced in Section 6, Appendix A of Specific Instructions to the Architect-Engineer (A-E). There will be no exceptions, other than as approved through the District Project Manager in conjunction with the Savannah District's Site Development Section (CESASEN-GD).

1.1.1.1 Quality of Design. It is the purpose of the Savannah District to obtain excellent siting and civil design resulting in efficient and economical site development conditions.

1.1.2 Specific Requirements.

1.1.2.1 Field Trip Report. At the beginning of project design, the A-E designer shall make a site inspection to determine what impact the site development portion of the project design will have on the existing site conditions. A report of this field trip, including documentary photographs, shall be prepared in the suggested format of Exhibit 5, Vol. I of this manual, and included with the site development portion of the Concept (35 Percent) Design Submittal.

1.1.2.2 "Site Adapts." Site adaptations of similar project designs approved for other locations are acceptable, provided the site adapt complies with the technical requirements contained herein.

1.1.2.3 Coordination During Design. To assure no conflict(s) arise with other design disciplines during project design, the A-E designer shall coordinate the site development portion of the project design as explained more thoroughly in paragraph 1.6c(1).

1.2 APPLICABLE PUBLICATIONS.

1.2.1 Army/Air Force Basic References.

Army: Architectural and Engineering Instructions (AEI), "Design Criteria," 3 July 1994 or later Edition

Army Reserve: DG 1110-3-107, Design Guide for U.S. Army Reserve Facilities

Army/Air Force: DG 1110-3-204, Design Guide for Army & Air Force Airfields, Pavements, Railroads, Storm Drainage, and Earthwork

Air Force: AFR 88-15, Criteria and Standards for Air Force Construction

All Services: Uniform Federal Accessibility Standards (UFAS), published in the Federal Register on 7 Aug 84.

1.2.2 Department of the Army Technical Manuals(TM's)/Air Force Manuals(AFM's).

TM 5-630/AFM 126-2	Natural Resources Land Management (Tri-Services Manual)
TM 5-800-1	Construction Criteria for Army Facilities
TM 5-803-4	Planning of Army Aviation Facilities
TM 5-803-5/AFM 88-43	Installation Design (Superseded TM 5-822-3)
TM 5-830-2/AFM 88-17/2	Establishment of Herbaceous Ground Covers w/Rev.
TM 5-830-3/AFM 88-17/3	Dust Control for Roads, Airfields, and Adjacent Areas
TM 5-830-4/AFM 88-17/4	Planting and Establishment of Trees, Shrubs, Ground Covers and Vines

1.2.2.1 Storm Drainage - Airfields and Roads.

TM 5-820-1/AFM 88-5/1	Surface Drainage Facilities for Airfields and Heliports
TM 5-820-2/AFM 88-5/2	Drainage and Erosion Control Subsurface Drainage Facilities for Airfield Pavements
TM 5-820-3/AFM 88-5/3	Drainage and Erosion-Control Structures for Airfields and Heliports
TM 5-820-4/AFM 88-5/4	Drainage for Areas Other Than Airfields w/Rev.

1.2.2.2 Roads and Streets.

TM 5-337	Paving & Surfacing Operations
TM 5-623	Pavement Maintenance Management

TM 5-818-2/AFM 88-6/4	Pavement Design for Seasonal Frost Conditions
TM 5-822-2/AFM 88-7/5	General Provisions and Geometric Design for Roads, Streets, Walks, and Open Storage Areas
TM 5-822-4/AFM 88-7/4	Soil Stabilization for Roads and Streets Pavements
TM 5-822-5/AFM 88-7/3	Engineering and Design Flexible Pavements for Roads, Streets, Walks, and Open Storage Areas, Supplement: "Design of Gravel Surfaced Hardstands," dated 20 March 1985, and ETL 1110-1-140, dated 15 Jul 88.
TM 5-822-6/AFM 88-7/1	Engineering and Design Rigid Pavements for Roads, Streets, w/Rev Walks, and Open Storage Areas, w/ETL's 1110-1-140 & 141, dated 28 Nov 84, 29 Jan and 15 Jul 88.
TM 5-822-7/AFM 88-6/8	Standard Practice for Concrete Pavements
TM 5-822-8/AFM 88-6/9	Bituminous Pavements Standard Practice
TM 5-822-9/AFM 88-6/10	Repair of Rigid Pavements Using Epoxy Resin Grouts, Mortars, and Concretes
TM 5-822-10/AFM 88-6/6	Standard Practice for Pavement Recycling

1.2.2.3 Army Airfields and Heliports.

TM 1-1520-250-23-1	General Tie-Down and Mooring Technical Manual-Aviation Unit and Intermediate Maintenance
TM 5-803-4	Planning of Army Aviation Facilities
TM 5-803-7/AFR 86-14	Civil Engineering Programming Airfield and Heliport Planning Criteria
TM 5-818-3/AFM 88-24/4	Pavement Evaluation For Frost Conditions
TM 5-823-2,w/Rev	Army Airfield - Heliport Flexible Pavement Design
TM 5-823-3,w/Rev	Army Airfield - Heliport Rigid and Overlay Pavement Design
TM 5-823-4,w/Rev	Marking of Army Airfield - Heliport Operational and Maintenance Facilities

TM 5-824-4	Airfields Other than Army Airfield Operational and Maintenance Facilities
TM 5-827-1/AFM 88-24/1	Airfield Pavement Evaluation Concepts
TM 5-827-2/AFM 88-24/2	Flexible Airfield Pavement Evaluation w/Rev

1.2.2.4 Airfield Pavements (Air Force and Air National Guard).

TM 5-818-3/AFM 88-24/4	Pavement Evaluation for Frost Conditions
TM 5-824-1/AFM 88-6/1	General Provisions for Airfield Pavement Design
TM 5-824-2/AFM 88-6/2	Airfield Flexible Pavements - Air Force
TM 5-824-4,w/Rev	Airfields other than Army Airfield Operational & Maintenance Facilities
TM 5-825-2/NAV DM	Flexible Pavement Design for Airfields (Tri-Services Manual) 213/AFM 88-6/2 w/ETL 1110-1-140 dated 29 Jan 88
TM 5-825-3/AFM 88-6/3 dated	Rigid Pavements for Airfields, w/ETL's 140 & 141 29 Jan. w/Rev & 15 July 88
TM 5-825-3-1/AFM	Rigid Pavement Design for Airfields Elastic Layered 88 6/3 Method

1.2.2.5 Railroads.

TM 5-850-2/AFM 88-7/2	Railroad Design and Construction at Army and Air Force w/Rev Installations
TM 5-627/AFM 91-33	Maintenance of Trackage (Tri-Services Manual)

1.2.2.6 Playgrounds and Recreation Areas.

EM 1110-1-400	Recreation Planning and Design Criteria
EM 1110-2-410	Design of Recreation Areas and Facilities
TM 5-803-10/AFR 88-33	Planning and Design of Outdoor Sports Facilities
TM 5-803-11/NAVY	Children's' Play Outdoor Areas P-383/AFM 88-30
TM 5-803-12	Planning of Outdoor Recreation Areas

TM 5-635/AFM 126-5	Natural Resources-Outdoor Recreation & Cultural Values

1.2.3 Huntsville Division Design Manuals for Ranges.

HNDM 1110-1-5	Design Information for Infantry Rifle Marksmanship Ranges
HNDM 1110-1-6	Design Information for Multipurpose Range Complex
HNDM 1110-1-7	Design Information for Military Operations In Urbanized Terrain (MOUT) Training Complex
HNDM 1110-1-8	Design Information for Multipurpose Range Complex, Light Infantry
HNDM 1110-1-9	Design Information for Range Control Facility
HNDM 1110-1-10	Design Information for Battle Simulator Centers
HNDM 1110-1-15	Design Information for Remoted Target System (RETS) Equipped Ranges

1.2.4 Military Standards.

MIL-STD-619B	Unified Soil Classification System for Roads, Airfields, Embankments and Foundations
MIL-STD-620A	Test Methods for Bituminous Paving Materials
MIL-STD-621A	Subgrade, Subbase and Test Method for Pavement Base-Course Materials

NOTE: A-E designers shall request that the District Project Manager furnish the latest revision/edition of the above manuals (TM's, HNDM's, etc) for project design.

1.2.5 National, State and Local Standards.

Georgia
Manual for Erosion and Sediment Control in Georgia
Department of Transportation State of Georgia Standard
Specifications Construction of Roads and Bridges

North Carolina
North Carolina Erosion and Sediment Control Planning and Design Manual
North Carolina Department of Transportation Standard Specifications for Roads and Structures

South Carolina
South Carolina Storm Water Management and Sediment Control
Handbook for Land Disturbance Activities
Guide to Site Development and Best Management Practices and Storm Water Management and Sediment Control
South Carolina State Highway Department Standard Specifications for Highway Construction

National
A Policy on Geometric Design of Highways and Streets (1994 or Latest Edition)

NOTE: A-E designers shall request that the District Project Manager furnish the latest revision/edition of the above manuals (TM's, HNDM's, etc) for project design.

1.3 **CODE 3 DESIGN REQUIREMENTS.** To be provided in specific instructions for contract or delivery order.

1.4 **PRECONCEPT SUBMITTAL REQUIREMENTS.**

1.4.1 Requirements for Site Surveys.

1.4.1.1 General.

a. The survey of the project site is intended to furnish complete information and data for design purposes; therefore, every effort should be made to make it thorough and not merely of a preliminary nature. Usually, a topographic map of the estimated project area is furnished the A-E by the District Project Manager. However, when the A-E is instructed to make the site survey, or to extend the survey due to site relocations, the work shall be performed under the supervision of a registered land surveyor, preferably registered in the State in which the project site is located.

b. Topographic surveys will usually be done by plane table methods at a scale of 1m = 400 m, unless otherwise directed. No feature shall vary more than 1/10 horizontal scale, except where distortion of scale is required to show a particular feature. Horizontal control for surveys will be based on localized datum(s) unless otherwise directed, and shall be of at least third order accuracy. Survey base lines shall be established throughout the project area with a minimum of two semi-permanent monuments shown on each baseline (B/L). The location and distance between these monuments will be shown. Vertical control (BM's/TBM's) for surveys shall be based on either USGS or USC & GS mean sea level (MSL) datum, unless otherwise directed, and shall also be of third order accuracy. A minimum of <u>two</u> temporary bench marks will be established for each final survey sheet. Existing ground elevations shall be shown to 0.01 (1/100) of a meter, and the density pattern of spot elevations shall be sufficient to ensure accurate interpolation of contours. Elevations on all paved areas shall be shown to 0.01 (1/100) of a meter. Surveys shall be plotted on dimensionally stable material such as Cronaflex or glass cloth. Line weights and symbolization will be compatible with map scale and consistent with accepted drafting

practices. (Reference Chapter A-10). Scale of the survey and contour interval will be as specified in the following paragraphs, unless otherwise directed.

(1) Surveys of road complexes and ranges, especially range complexes, may be plotted at a scale of 1 m = 500 m or even 1 m = 1000 m to reduce the total number of sheets required in the final contract drawings. However, the topography around the assembly and parking areas, building sites, etc, shall be shown at the preferred scale of 1 m = 400 m or 250 m to assure clarity of the final grading plan, especially at 1/2 size reduction. (This may be done photogrammetrically when preparing the individual site plan C-Plates described in paragraph 1.6.2).

(2) When endangered species, such as the Red Cockaded Woodpecker (RCW) are believed/known to inhabit the proposed project site, this information shall be coordinated with the user (PWBC or BCE). The location of nesting or den trees shall be plotted and clearly identified on the topographic map, as these locations will definitely affect the final location of the proposed project.

c. Obstruction surveys usually include a topographic survey within the prescribed limits of the easement area(s); establishing property lines and ownership; placing tags on trees considered to be obstructions; determining the elevation of obstructions with pertinent information for clearing requirements which shall be recorded in duplicating field books. These surveys are usually plotted at the same scale as the topographic survey, unless otherwise instructed.

1.4.1.2 Minimum Data Required.

a. Topographic Survey. (Scale of 1 m = 400 m preferred. 1 m = 250 m may be used for small sites, and 1 m = 500 m or more for the "downrange" portion of firing ranges, unless otherwise directed).

(1) Survey of area (show property lines and ownership, and location(s), elevation(s) and descriptions of BM's/TBM's).
(2) Limits beyond project area, as required (see special instructions).
(3) Finished floor elevations (FFE) of existing building(s) on or adjacent to project site.
(4) Heights, type, and characteristics of existing structures, including bldg. nos.
(5) Roads, streets, and trails; sidewalks; and paved areas.

(a) Typical roadway section(s).
(b) Profile of roadway centerline (C/L).
(c) Limits of right-of-way (R/W).
(d) Type of construction (gravel, asphalt, etc.).
(e) Condition of surface (cracked, potholed, etc.).
(f) Street names: township, county, state and federal highway numbers.
(g) Culverts: size, type, invert elevations, and condition.
(h) Bridges: size, type, material, and condition.
(i) Guardrail: location, and type of material.

(j) Distance from storm drain inlets to trunk line.
(k) Sidewalks, w/spot elevations.
(l) Trails.
(m) Curbs: type, spot elevations along gutter line and top of curb.
(n) Joint layout of "existing" airfield/hardstand pavements, with spot elevations at joints.

(6) Railroads.

(a) Alignment of track and location of road crossings.
(b) Number of tracks and weight of steel rail.
(c) Elevations along base of rail.
(d) Locations of turnouts and sidings (station point of switch and turnout number).
(e) Drainage structures: size, type, invert elevation and condition.
(f) Width of right-of-way (R/W).
(g) Name of serving company (Southern Systems, etc.).
(h) Distance and direction to nearest station(s) or milepost.

(7) Utilities.

(a) Water.

(i) Alignment of pipeline(s) within the project area.
(ii) Type (CI, PVC, etc.) and size of pipe.
(iii) Depth below existing ground line.
(iv) Storage capacity of tank(s).
(v) Location of fire hydrants.
(vi) Valve locations.

(b) Sanitary Sewer Collection.

(i) Alignment of pipeline(s) within the project area.
(ii) Type (RCP, DIP, etc.) and size of pipe.
(iii) Depth below existing ground line.
(iv) Manholes: size and top and invert elevations.

(c) Sewage Disposal Facilities.

(i) Location and size.
(ii) Elevations at top and bottom of structure(s).
(iii) Elevations of inlet and outlet pipes.

(d) Storm Drainage.

(i) Alignment of pipe lines within the project area.
(ii) Type (CMP, RCP, etc.) and size of pipe.

(iii) Depth below existing ground line.

(iv) Manholes: size and top and invert elevations.

(v) Profile of open ditches above and below culverts and surface inlets.

(vi) Inlets: top and invert elevations, and number and size of grates. For curb type inlets with no grate, give length of opening, invert elevation at throat (gutter line), and top elevation of structure directly over the opening.

(vii) Dimensions of inlet structure(s).

(viii)Delineate extent of drainage areas (for drainage area map in design analysis).

(ix) Headwalls: give type, dimensions, pipe diameter(s) and invert elevation(s) at end(s) of pipe.

(x) Where pipe terminates in ditch without a headwall, indicate if flared end section (FES) or end of pipe is in good condition or damaged. Also, if ditch is stabilized or eroded.

(xi) Where storm drainage pipe extends beyond survey limits, secure length and invert elevation of pipe at next structure upstream or downstream to determine percent slope of pipe.

(e) Fuel Dispensing and Storage.

(i) Type, source and capacity of tanks, if available.

(ii) Alignment of fuel lines, depth, type, pipe size and pressure.

(iii) Name of serving company.

(f) Electrical Power.

(i) Alignment of powerlines (aerial or underground) within the project area.

(ii) Pole locations and heights.

(iii) Transformers: Number and size.

(iv) Service lines: Number of wires, size and material; voltage and phase; height of line above existing ground line.

(v) Name of serving company.

(g) Telephone Communication.

(i) Alignment of lines, (aerial or underground) within the project area.

(ii) Pole locations and heights.

(iii) Number of wires, size and material; height above existing ground line at pole.

(iv) Name of serving company.

(8) Ground Covers.

(a) Type of Crop, where applicable.
(b) Grass.
(c) Brush.
(d) Trees: species, diameter, height, condition, location of all hardwood and other trees 4 inches and larger in diameter to be retained on the project site.

(9) Fencing.

(a) Type and location (alignment), including location(s) and size of gates.
(b) Number of barbed wires on extension arm, where applicable.
(c) Height and type of fabric.
(d) Kind of posts and condition.
(e) General condition of fence as a whole.

(10) Endangered Species Habitat.

(a) Show location(s) of nesting or den trees.
(b) Prominently mark/identify trees for Contractor's ease in preserving same during construction operations.

(11) Maps and Drawings. Copies of all existing pertinent maps and "as-built" drawings, furnished by the appropriate using service (DEH or BCE).

b. Obstruction Survey. (Scale same as for Topographic Survey, unless otherwise directed).

(1) Topographic map of prescribed area.
(2) Elevations of all existing structures and other topographic features.
(3) Show all property lines and ownership.
(4) Place tags on trees which are obstructions and submit the following information recorded in duplicating field book(s):

(a) Species of tree(s) and diameter breast high (DBH).
(b) Ground elevation at base of tree(s).
(c) Elevation of top of tree(s).
(d) Number of feet to be removed.
(e) Obstruction number.

c. Boundary and Easement Surveys. (Scale same as for Topographic Survey, unless otherwise directed).

(1) Install iron pins for horizontal control, showing locations and coordinates.
(2) Indicate ties to existing base lines, land corners, and either the installation's or state plane coordinate system, when applicable.
(3) Show property line locations with distances and bearings, when applicable.

d. Safety Requirements, All Surveys. Locate and describe all features, to the extent appropriate. Indicate the existence of all permanent features, constructed work, etc., which might constitute a hazard to Contractor(s) personnel who will be working in the area.

e. Special Requirement for Ft. Bragg, N.C. The survey will be registered to the North Carolina State Plane Coordinate System – Zone 3200 – NAD83 -- U.S. Survey Feet. Elevation units will be MSL GRS80 U.S. Survey Feet.

f. Special Requirement for Utility Information on Topographic Surveys. The chief of the survey party shall coordinate with the installation's Engineer (PWBC, DPW, or BCE) concerning all existing utility lines shown on the plane table sheets to ensure that every effort has been made to obtain correct and complete information regarding utility locations.

g. Field Check of Plane Table Survey. When required by specific instructions during completion of final design, a field check shall be made to determine the accuracy of the plane table sheets. The cross sections shall be taken where indicated on the drawings, marked in red, and the changes in existing ground levels recorded at maximum 30 meter intervals along each cross section. These cross sections shall be spaced at approximately 60 meter intervals, unless otherwise shown, with a minimum of two cross sections to each plane table sheet. The original cross section check level notes shall also be submitted with the plotted survey data.

1.4.1.3 Final Preparation.

a. Plot final topographic drawings for submittal as outlined in Drawings Section. Contour intervals shall be 0.25 meter, unless otherwise directed. Drafting shall be in accordance with requirements contained in Chapter A-10 of this manual. The title block shall have no entries made therein, except for the installation name and location, and the horizontal scale.

b. Include the following statement to the left of the title block.

"Topographic survey for (Specific Title of Project) by (Name of Firm), surveyed (Date of Survey)."

1.3.1.4 Submittal.

a. As soon as possible after completing the survey (i.e., with the first required design submittal), the A-E shall submit the following documents to the District Project Manager:

(1) Reproducible copies of the completed and traced topographic survey map(s).
(2) All original field survey notes and/or plane table sheets, appropriately marked and dated.

b. The reproducible topography described in subparagraph 1.3.1.4a(1) above is in addition to that required to be included in the contract drawings as the "Existing Topography Plan," described in paragraph 1.6.2.3. If plane table sheets were furnished by the Government, the A-E shall return same to the District Project Manager.

1.4.2 Ten Percent Design Submittal Requirements. See Vol. 1, paragraph 1.3, Part A, of this manual for general requirements for this submittal. For site development, also furnish the following items:

a. A location plan with vicinity map, as per paragraph 1.4.2.1.

b. A sketch of the proposed project site showing the "existing" topography, scale, spot grades, etc. Identify any bordering/adjacent roads and streets, also any "existing" structures, utility lines, or other site feature(s) that may impact the proposed project.

1.5 CONCEPT OR EARLY PRELIMINARY (35 PERCENT) DESIGN SUBMITTAL REQUIREMENTS.

1.5.1 Concept Design Analyses. The site development portion of the Concept Design Brochure shall include a brief narrative covering the following items, as applicable to project design.

1.5.1.1 General.

a. Location of and access to the proposed project site, with brief explanation of objectives and factors influencing siting decisions.

b. General overview of major planned site features, including: building orientation; surface drainage patterns; traffic circulation; parking provisions and pedestrian access, including provisions for the handicapped; security requirements; etc.

c. Impact of new construction on existing facilities and considerations for future expansion.

d. Existing site features, including: general topography, tree cover, acreage, boundaries, unusual subgrade conditions, etc.

e. Former use of the site when major removals, demolition, and salvage are required.

f. Requirements for flood protection, if applicable.

1.5.1.2 Demolition and Removals.

a. Specific items requiring removal, relocation, or demolition and salvage.

b. Disposition of salvaged or waste materials.

1.5.1.3 Site Geometry.

a. Rationale for locating major site elements.

b. Specific clearance or setback requirements (reference the "Installation Design Guide" for the particular military installation, or TM 5-803-5 or Force Protection Requirement for project whichever is greater).

c. Roads (Location and Layout).

(1) Traffic volume (no., type, and size of anticipated vehicles), secured from DEH/BCE.

(2) Particular AASHTO design vehicle for which turning movements are to be provided, and corresponding minimum turning radius required.

(3) Maximum design speed, degree of curvature, control grades, and sight distance requirements for road networks, when required.

(4) Lane and shoulder widths and cross slopes, as per the applicable TM/AFM.

(5) Roadfill embankment slopes and back slopes in cut. (Refer to paragraph 1.6.2.6 for guidance).

(6) Requirements for curbs, sidewalks, guardrail, traffic signs and markings, fencing, etc, as specified in applicable TM/AFM.

(7) Intersection(s) or connection(s) to existing roads, streets or parking areas.

(8) Surface drainage features, both existing and proposed.

(9) Easements and rights-of-way.

(10) Traffic routing during construction.

d. Parking (POV or MEP) and Open Storage Areas.

(1) Size, type, and number of vehicles to be accommodated, as estimated by user. (Refer to paragraph 1.6.1.2 for guidance).

(2) Number and size of individual parking spaces to be provided, including pedestrian access and number and location of handicapped parking spaces, when required.

(3) General location of parking or storage areas, including location of entrance and exit drives.

(4) Use of 90-degree, 60-degree, or 45-degree parking spaces and relation to anticipated traffic operation.

e. Miscellaneous Site Features.

(1) Concrete curbing and curbs and gutters (locations and types).

(2) Sidewalks - Estimated volume of pedestrian traffic, required width and locations, as specified in applicable TM/AFM.

(3) Fencing - justification, type, height, size and location of gates.

(4) Traffic signs - types and locations.

(5) Pavement markings - type(s), locations, spacing, and whether or not reflectorized striping will be required.

(6) Guardrail and wheel stops - location, length, and type of material(s).

f. Railroads, when specified in project design.

(1) Type of service for which track will be provided.

(2) Anticipated volume of rail traffic.

(3) Maximum grade(s) and degree of curvature, as per applicable TM.

(4) Features of track construction such as: thickness and type of ballast, weight of rail, dimensions of cross ties, size of turnouts, etc.

(5) Special requirements for track scales, bumpers, signals, grade crossings, derailers, etc., as required.

1.5.1.4 Site Grading.

a. Existing site features affecting grading, such as: buildings, streets, curbs, walks, fences, water courses, ponds, elevation of anticipated high water, rock outcrop(s), etc.

b. Design flood frequency and minimum finished floor elevation (FFE) required to provide the desired level of flood protection.

c. Unusual excavation requirements and rough estimate of cut and fill quantities, plus slope stability analysis (cut and fill) and justification for any slopes steeper than 4:1, except as described in paragraph 1.6.2.6.

1.5.1.5 Storm Drainage Design.

a. Select design values to be used in the storm drainage design calculations, including: rainfall intensity, based on the appropriate 10-year, 1 hour storm frequency, unless otherwise instructed; surface runoff and retardance coefficients, etc, as listed in paragraph 1.7.1.1.

b. Selected storm drainage plan with respect to planned connections to the existing storm drainage system, when applicable.

c. Alternate schemes considered in arriving at selected storm drainage plan.

d. Considerations for future expansion and change in land use within the watershed, particularly above the project site.

e. Principal means of collection and disposal of storm water in the new storm drainage system. Include "brief" calculations for runoff and estimated sizing of pipe and drainage structures. (Reference paragraph 1.7.1.1).

f. Method proposed for handling roof runoff from gutter downspouts (splash blocks or roof drain collector system).

g. Connections of building's mechanical drains to outside drainage system, where applicable, and cross referencing to the appropriate section and design discipline, when required. (Reference paragraph 1.7b(1)).

h. Locations and features of special storm drainage structures, when required.

i. Types of materials to be specified for storm drains, culverts and drainage structures, allowing full range of options of suitable materials for each installation.

j. Easement requirements, when applicable.

1.5.1.6 Pavement Design. Pavement and base course thicknesses given in the Project Development Brochure/Air Force Project Book shall not be accepted verbatim by the A-E. The required pavement thickness shall be determined by a pavement design analysis in accordance with procedures specified in the applicable design manuals (TM's/AFM's) which are available on request from the District Project Manager. (See paragraph 1.7.1.2 for additional guidance).

a. Brief description of general soil conditions on the project site.

b. Design Thickness of Vehicular Pavements.

(1) Specific design values for which pavement thickness is based, including: the anticipated number, type, frequency and maximum weight(s) of vehicle axle loads; category of traffic; class of road or street; and assumed design index (DI).

(2) Flexible Pavements -- required thickness of base (150 mm minimum) and surface courses, based on the assumed subgrade CBR and design index "DI" values, as noted above. (Reference paragraph 1.7.1.2).

(3) Rigid Pavement -- required thickness of nonreinforced portland cement concrete (150 mm minimum) having a minimum 28-day flexural strength of 4480 Kpa and the assumed modulus of subgrade reaction "K," also described in paragraph 1.7.1.2.

c. Design Thickness of Airfield Pavements.

(1) Flexible Pavement - specific design values for which pavement thickness is based include: the airfield class, type of traffic area, gross weight of aircraft, number of passes, assumed subgrade CBR, and resulting minimum thickness of base and surface courses.

(2) Rigid Pavement - specific design values for which the pavement thickness is based include: the type of aircraft; gear configuration and design load; modulus of subgrade reaction "K" or resultant modulus of both subgrade and base courses; flexural strength of concrete; and resulting minimum thickness of base and surface courses.

1.5.1.7 Erosion Control. Include a short paragraph in the site development narrative stating what practices/measures are proposed for the project site. Also, reference the applicable State Design Manual containing the erosion control requirements for the state in which the proposed project is located. (See paragraphs 1.6.1.3 and 1.6.2.7).

1.5.1.8 Landscape Design. When required, the landscape design narrative shall include an analysis of existing site conditions, including an indication of existing plant materials that are to remain on the project site. The narrative shall indicate specific site problems related to proposed development and the rationale for proposed plant selection and locations. (See paragraph 1.4.2.3). The narrative may also include a list of suggested types and sizes of plant materials which are to be used, based upon the approved plant list, and the designated functional and visual criteria requirements from the applicable Installation Design Guide (IDG).

1.5.1.9 Berm Design (For Ranges). A brief design analysis, consistent with criteria in the applicable HNDM from paragraph 1.2.3, and based on the appropriate design parameters presented at the Predesign Conference, shall be included for all range projects. (See paragraph 1.6.1.3).

1.5.2 Concept Design Drawings. Site development's portion of the Concept Design Brochure shall include the following:

1.5.2.1 Location Plan. This shall consist of an appropriate portion of the Military Installation's General Site Plan and Vicinity Map furnished by the Savannah District's Project Manager, on which the proposed location of the facility being designed will be shown. Indicate location of project site, Contractor's designated access and haul routes to

the site, and the designated borrow and disposal areas. (Drawing should be complete for 35 percent design submittal).

1.5.2.2 Project Site Plan (Geometry). Normally, this consists of a "composite" drawing(s) of Plates C-2 through C-5 described in paragraph 1.6.2, at the same scale (1 m = 400 m or 1 m = 250 m) and covering the same area as the topographic survey sheets. Show the foundation plan outline (footprint) of all structures (existing and proposed, including building numbers), on or immediately adjacent to the site, and all trees determined by field survey to be worth saving/incorporating into the project design. Show actual ground contours existing on the project site at the same contour interval as the topographic survey sheets. Show the proposed finish grade contours tied into the existing ground contours indicating the extent of anticipated grading and area disturbed by construction to the existing site terrain and tree cover. All future structures and associated facilities within a reasonable proximity of the project site shall also be shown. Show all existing and proposed utility lines and structures required to serve the project, including: water, sanitary sewer, storm drainage, electric power, gas service, fuel service, high temperature and chilled water. If applicable, all telephone and other communication lines, and any and all other utility support items shall also be shown. These utility lines and structures shall be sized in the best judgment of the design engineer at this concept stage without making a complete design analysis. Each utility shall be appropriately identified by a symbol in a legend on the drawing(s). The drawing(s) shall show all existing and proposed driveways, parking areas, can washer locations, garbage storage and pick-up pads, and any other items necessary for functional and operation adequacy, including typical roadway and pavement sections. Emphasize the erosion control measures proposed, including a note stating that a "complete" Erosion Control Plan, complying with requirements of the applicable State Erosion Control Manual, will be included with the Preliminary (60 Percent)/Final (100 Percent) Design Submittal."

a. Show the proposed geometry of the project site plan using a minimum scale of 1 m = 400 m, unless otherwise instructed. Provide sufficient geometric information to adequately locate all new site elements. Include any "existing" topography that will remain after construction is completed.

b. Show and identify all existing buildings, utilities and other facilities on/immediately adjacent to the project site.

c. Use symbols differentiating between new and existing sitework, in accordance with the sample legend in Fig 1, Exhibit A-1-1, and the District's Drafting Standards Manual (See Chapter A-10 herein).

d. Show bench mark locations and list horizontal and vertical control data for each, as per page 14-2 in the District Drafting Standards Manual.

e. Include a north arrow, with site preferably oriented with North arrow pointing to top of the sheet, as per page 7-1 in the District Drafting Standards Manual.

f. Show the complete storm drainage system, using either finished grade contours or slope arrows and estimated size(s) of storm drain pipe, as per paragraph 1.4.1.5.

g. Show the proposed finished floor elevation (FFE) of all new buildings and critical finish grade spot elevations at building corners, along sidewalks, edges of paved areas, etc., to assure positive drainage away from buildings/structures and to storm drain inlets.

h. Show proposed locations of and include a note stating that the appropriate erosion control measures will comply with the applicable State Publication(s), as per paragraph 1.6.2.7.

i. Include existing utilities with the site topography. If necessary for clarity, show removals, relocations, and new work for utilities other than storm drainage on separate plan(s).

j. The thickness of typical flexible/rigid pavement sections shall be based on assumed compacted subgrade CBR/K values that, in the designer's best judgement, will provide adequate support for the type of pavement being designed, based on estimates from the using service (PWBC or BCE) of the vehicles anticipated to be using the roads, drives, parking area(s), etc. of the proposed facility. (See paragraph 1.4.1.6).

k. For site development, the term "Site Plan" applies only to the Concept/Early Preliminary (35 Percent) Design Submittal. For the subsequent Preliminary (60 Percent) and Final (100 Percent) Design Submittals, the "composite" Site Plan will be expanded into "separate" plates, as described in paragraph 1.6.4, unless otherwise instructed in Appendix A, Section 6 of the Specific A-E Design Instructions. (See paragraph 1.6.2 for additional guidance).

1.5.2.3 Landscaping Plan. When required, this shall consist of a narrative including a list of the major plant types to be used in the project design and a drawing (Plate L-1) showing a small portion (at least one building and one open area) of the project site to indicate the Landscape Architect's ideas or intent. The overall design approach, as applicable, shall depict factors which affect existing site features and influence subsequent design proposals. The concept drawing(s) shall be prepared at the same scale and shall include an appropriate legend, north arrow and graphic scale, same as the project site plan. (Reference paragraph 1.6.2.9 for additional guidance).

1.5.3 Outline Specifications. A list of outline specifications to be utilized in the site development portion of the project design shall be selected from the list of guide specifications included in paragraph 1.10 of this chapter. (See Exhibit A-1-9 and Chapter A-11 for additional guidance).

1.5.4 Estimated Sitework Quantities. A list of estimated quantities of sitework for the site development portion of the project design for both Army and Air Force projects shall be included in the A-E's cost estimate submitted with the concept design submittal. The estimated sitework quantities shall be presented in a format similar to the appropriate sample included in Chapter A-9 of this manual. (See Exhibit A-9-4).

1.5.5 Survey Data. Topographic site survey data will be submitted with this design submittal, as described earlier in paragraph 1.3.1.4.

1.5.6 Additional Information. A tabulation by the A-E designer of any design data he has not received that, in his judgment, he will need to proceed to completion of final design and preparation of "complete" bidding documents without interruption or delay, when so directed by the District Project Manager.

1.6 **PRELIMINARY (OVER THE SHOULDER) DESIGN SUBMITTAL REQUIREMENTS.** See Vol. I of this manual for requirements for this design submittal.

1.7 **PRELIMINARY (60 PERCENT) DESIGN SUBMITTAL REQUIREMENTS.**

a. The site development portion of a Preliminary Design Submittal shall include the following items:

(1) Fairly complete site plan (C-Plate) drawings, including landscaping (L-Plates) when required.

(2) Design analyses for storm drainage and pavement design.

(3) Outline/draft project specifications covering all items of site development work shown on the drawings.

(4) Estimated sitework quantities of all items for site development that are shown on the drawings and included in the project specifications.

(5) Any additional technical requirements not already furnished by the District Project Manager.

The above items are more thoroughly described in the following subparagraphs 1.6.1 through 1.6.5.

b. General. The A-E designer shall proceed from concept to final project design, incorporating comments received from review of the Concept Design Submittal. Grading, paving, storm drainage and landscaping considered in the preliminary design stage shall consider the following items:

(1) Economical development of suitable building sites.

(2) Preservation of the natural character (aesthetics) of the project site by minimum disturbance to existing ground levels to conserve trees and reduce extent of potential erosion.

(3) Satisfactory collection and disposal of surface runoff to retard erosion.

(4) Reasonable balance of cut and fill to reduce cost of removal and disposal of excessive excavation, or securing additional borrow material to avoid unsightly earthfills that will unnecessarily increase the height of the building foundations, and require costly erosion-control measures.

(5) Avoiding wavy profiles in streets and walks.

(6) Avoiding excessive grades or steps in sidewalks, whenever possible.

(7) Where rock is encountered close to the surface, keep the finished grade(s) as high as practicable to reduce cost of excavating utility trenches.

c. Specific.

(1) Coordination. All phases of the project design, (i.e., architectural, structural, mechanical, sanitary sewage, water and electrical) shall be closely coordinated with the site development (grading and paving layout). Locations of sidewalks, drives and parking areas, as well as finish grade elevations around building(s)/structure(s) shall tie into the requirements shown on the architectural (A-Plate) drawings. Unless otherwise instructed, concrete pads, electrical substations, cooling towers and other such items as required in the project layout must be shown on the Grading Plan to assure a complete grading design.

(2) Special Ft. Bragg, N.C. Layout Plan Requirements.

- ❑ A single model file or map of the entire site indicating the location of all existing and proposed utilities and other constructions to include the footprint of structures, paving (including curbing), sidewalks, and other relevant planimetric features at the completion of the project. Provide a separate file for base bid and options.
- ❑ See Para 1.4.1.3.e for specific survey requirements.
- ❑ Due North on the map will be as viewed from the bottom of the map. Rotations will not be allowed nor will orientation to Magnetic North.
- ❑ The map will contain a labeled coordinate grid with spacing appropriate to the map extents. For instance, a map scale of 1″=30′ will have coordinates labeled at 100′ intervals north/south and east/west.
- ❑ A minimum of four tie-in points will be labeled on the map located near the four corners of the map. The tie-in points will show a symbol at the location of the point and a label indicating the Northing and Easting of each point.
- ❑ All utilities on the map will be clearly labeled as to size and material. Where utilities are to be enclosed in conduits or duct work, a section of the duct will be shown clearly indicating the dimensions and material of the duct, the contents of the duct such as wire size and type of conductor, whether conductor is primary or neutral, number of conductors, hot water supply or return, pipe size, insulation type and thickness, etc.
- ❑ The map will show the invert elevation of all manholes as well as the invert of each pipe joining a manhole as well as the invert and character of all outfalls.

(3) Landscape design, when required, shall consist of preparing landscape plan studies and complete drawings and specifications for the project. The design shall be based on all general and specific criteria (drawings, manuals, etc.) contained or referenced elsewhere in this chapter.

(4) The "Checklist for A-E's Review" included in Chapter A-1, Volume III of this manual is not intended to contain all the design requirements cited herein. However, it is intended to emphasize the important technical requirements items that can cause problems, if not included in this and subsequent design submittals. The A-E designer shall use the checklist as a guide to assure that each of the listed items is included in both the Preliminary and especially the Final design submittals of the site development portion of project design. (See Exhibit A-1-10).

1.7.1 Preliminary Design Analyses. Expand the Concept Design Analyses to support the preliminary design submittal, showing complete detailed analyses, date of initial preparation and names of preparer and checker. Include the following in booklet format (see Exhibit A-1-3, Vol III), as applicable to project design:

1.7.1.1 Storm Drainage Design.

a. Complete storm drainage design calculations consistent with the requirements of the applicable TM's/AFM's, based on the design values presented in the Concept Design narrative and incorporating review comments from the Concept Design Submittal.

b. Design Analysis. Design of the storm drainage system and culverts shall conform to the criteria and references specified herein. The procedures for design and preparation of the complete storm drainage design analysis are given in detail in "Storm Drainage Design Instructions for Roadways and Built-Over Areas," included as Exhibit A-1-2, Vol. III of this manual. A sample format containing the "minimum" data required for a complete design analysis is included as Exhibit A-1-3, in Vol. III of this manual.

(1) Technical Requirements.

(a) Design Storm. For the design storm index, use the 10-year 1 hour frequency intensity curve illustrated in TM 5-820-1, Figure 1, Chapter 1, applicable to the area in which the project is located. Round off to the nearest one-tenth (1/10) inch. Ten-year design storm frequencies for most of the major military installations are listed as follows:

(i) Georgia:

a. Fort Benning	2.8
b. Fort Gordon	2.6
c. Fort Stewart	3.0
d. Hunter Army Airfield	3.0
e. Moody Air Force Base	2.9
f. Dobbins Air Force Base	2.6
g. Robins Air Force Base	2.7
h. Kings Bay Military Ocean Terminal	3.0

(ii) North Carolina:

a. Fort Fisher	3.0
b. Fort Bragg and Pope Air Force Base	2.8
c. Seymour Johnson Air Force Base	2.9
d. Wilmington, NC and Sunny Point MOT	3.0

(iii) South Carolina:

a. Fort Jackson	2.6
b. McEntire Air National Guard Base	2.7

(b) Determination of Runoff.

Rational Method Formula; Q = CIA
Q = Runoff in cubic feet per second (cfs)
C = Imperviousness factor
= Average rainfall intensity in inches per hr.
A = Drainage area in acres

(c) Adopted Imperviousness Factors.

C = 1.0 (paved); C = 0.40 (turfed)

(d) Length of Runoff corrected to 1.0 percent for determining Time of Concentration (t_c). (See TM 5-820-1, App B, Figure 9).

(e) Time of Concentration (t_c). Select from any of the Supply Curves from TM 5-820-1, App. B, Figures 10 through 17.

(f) Intensity. Inches/hour (I) determined from TM 5-820-1, Figure 2.

(2) Computations for Enclosed Pipe Systems.

(a) Tables. Table I, CESAS Form 1178 (Exhibit A-1-4), and Table II, SAS Form 1155 (Exhibit A-1-6) are used in tabulating the drainage design computations. Form 1178 is completed first by determining the drain-inlet capacities, based on the design storm criteria and drainage area map. Form 1155 follows, showing the accumulation of runoff, based on the data listed in Form 1178. Table III, SAS Form 1156 (Exhibit A-1-7) is

then used to compute the hydraulic gradient of the entire storm drainage system to determine the hydraulic gradient(s) at all inlets and manholes. If the gradient rises above the midpoint between top of pipe and top of manhole or inlet, the size of pipe or the pipe slope(s) should be increased throughout the downstream portion of the system to lower the hydraulic gradient. The hydraulic gradient line shall appear only on the pipe profile(s) in the design analysis, not on the drafted profiles included in the contract drawings. (Full size copies of the above forms (Tables I, II, and III) are available on request from the District Project Manager.)

(b) Time of Concentration (t_c). Time of concentration is established as outlined in the manual referenced above. In all but exceptional cases, other than roof drain collector system, the minimum t_c for paved areas is 10 minutes; t_c for roof drain collector system is 5 minutes. (A roof drain collector system includes all storm drain pipe inside the 5-foot building line from the downspouts to the point of discharge at an inlet or manhole). For turfed area(s), the t_c is based on the combined length of overland and channelized flow on the turfed area(s). This length is corrected to a 1.0 percent slope using a retardance coefficient "N" equals 0.40 in the left hand chart of Figure 9, TM 5-820-1 and reading the corrected slope for the actual ground slope on the right hand chart of Figure 9. This corrected length is then entered in any of the supply curves, Figures 10 through 17. The duration of supply in minutes is the value read at the intersection of the corrected length (L) and the dotted curved line. This value is then entered at the bottom of Figure 2 and the rainfall intensity read to the left of the intersection of duration in minutes with the design storm index given above. When the storm drainage pipe system extends more than 300 feet, the A-E designer shall determine whether the computed design discharge will be less as a result of the time of flow in pipe, as outlined in Chapter 2 of "Storm Drainage Design Instructions for Roadways and Built-Over Areas" (Exhibit A-1-2). For computing flow time in the pipe, enter in column 6 of Form 1155 the value of 3 feet per second, which may be assumed for all cases. The drain time in minutes under column 7 will be the length of pipe divided by the product of 3 feet per second and 60 seconds per minute. To simplify computations, the accumulative amount to be entered in column 8 should be to the closest minute or, in the case of larger systems to the nearest 5-minute interval.

(3) Types and Sizing of Pipe and Structures. Except as noted herein, pipe structures shall be selected in accordance with TM 5-820-4, Chapters 3 and 4, and pipe sizes for enclosed storm drain systems determined in accordance with Appendix B, Figures 25 and 27 of TM 5-820-1. Use "n" = 0.012 for concrete, clay, or fully bituminous coated, fully paved (Type "D") galvanized steel, aluminum alloy, or aluminized steel (Type 2) corrugated metal pipe (CMP). Use "n" = 0.024 for fully bituminous coated (Type "A") galvanized steel, aluminum alloy, or aluminized steel (Type 2) CMP. (See Exhibit A-1-2 for full description of Type "A" and Type "D" pipe.) The A-E designer shall design for the "optional" use of concrete, clay, or CMP; using Figure No. 39, Exhibit A-1-1 to record the required data in the contract drawings. (NOTE: Due to the corrosive action of the soils, do <u>not</u> use aluminum pipe in the Fort Stewart and Kings Bay Military Ocean Terminal, Georgia projects nor the Sunny Point Military Ocean Terminal, North Carolina project). Although acceptable for pipe culverts, Type "A" CMP is <u>not</u> to be installed in "enclosed" storm drain systems under paved areas. In addition, the A-E designer should also note that, in specifying Type "A" CMP, the diameter in most cases will be larger than the

required size of concrete, clay, or Type "D" CMP. However, do not specify pipe in 27- or 33-inch sizes, since they are not commonly available. All inlet, grate, or weir openings must be checked for size to be certain that the opening(s) will pass the calculated storm run-off draining to each inlet. Pipe strength (D-load for rigid pipe and gauge for corrugated metal pipe (CMP)) is usually determined from the tables in Appendix C, TM 5-820-4. However, for pipe diameters less than 84" and fill heights of 10 ft or less, use the following minimum gauges for corrugated metal pipe in lieu of gauges given in TM 5-820-4:

CORRUGATED METAL PIPE, TYPE I (CIRCULAR)
67 mm x 12.7 mm Corrugations

Galvanized Steel and Aluminized Steel, Type 2		Aluminum Alloy	
Pipe Diam	Gauge	Pipe Diam	Gauge
300 mm thru 600 mm	16	300 mm thru 600 mm	16
1200 mm thru 1350 mm	14	750 mm thru 900 mm	14
1500 mm thru 1650 mm	12	1050 mm thru 1350 mm	10
*1800 mm	10	1500 mm thru 1650 mm	10
1950 mm thru 2400 mm	8	1800 mm thru 2100 mm	8

*For 1800 mm diameter pipe, the designer has the option of using 14-gauge steel pipe having 75 mm x 25 mm corrugations. (If used, revise "n" factor to 0.027 instead of 0.024 for Type "A" pipe.)

For pipe diameters larger than 2100 mm and fills exceeding 3 m in height, use the appropriate tables in Appendix C, TM 5-820-4.

For conditions other than trench and positive projecting conduits and other conditions differing from those given in the tables, the design and detail analysis shall be made in accordance with Appendix B of TM 5-820-4. If the appropriate table is not referenced, the methods used and the computations for determining pipe strength shall be included in the storm drainage design analysis. Provide watertight joints for storm drainage pipe under all pavements (aircraft and vehicular), especially when the pipe is placed in soils with fluctuating water tables. Minimum pipe diameter for roof drain collector system(s) shall be 150 mm. Minimum pipe diameter for enclosed storm drain system shall be 300 mm.

(4) Calculations and Drainage Area (DA) Map. Complete calculations and drainage area map for the design analysis must be submitted on reproducibles at same time drawings are submitted for review and comments. The DA map, at an approved scale (for small projects the scale is usually the same as the Grading Plan), shall show the limits of

the entire drainage area, the acres of both turfed and paved areas, location of each storm drain line and structure, numbered designation of each structure, pipe sizes, invert elevations and direction of flow. The DA map shall be attached at the end of the Storm Drainage Design Analysis. Depending upon site topography, portions of the drainage area may lie outside the proposed project limits. If so, these off site areas must also be included to prevent possibility of the new SD system being inadequate to handle the resulting surface runoff. If not included in the topographic site survey, use USGS Quad Sheets, etc. to determine extent of off site areas. Sketches and calculations showing proposed head, waterway areas and capacities in cubic feet per second (cfs) for inlets (i.e., grates, weirs, throats, etc.) must also be included in the design analysis. A factor safety of 1.5 is used for paved areas. In vegetated areas where grass clippings and trash may clog the inlets, use a safety factor of 2. The drainage area (DA) map, layout sketch of storm drainage system, and design computations are not a part of the contract drawings and, therefore, should be referenced separately. See "Storm Drainage Design Instructions for Roadways and Built-Over Areas" (Exhibit A-1-2).

(5) Trunk Lines. In cases where sizing a large, critically important trunk line becomes complicated because of several lateral lines and extensive upstream drainage areas in rolling or hilly terrain, a composite hydrograph showing the resultant t_c and it's Q will also be developed from the principle illustrated in Figure 8, Appendix B of TM 5-820-1, taken with the t_c's developed on CESAS Form 1178 or SAS Form 1154 (Exhibits A-1-4 and A-1-5). Drainage areas involved must be carefully determined and outlined on a reproducible topographic map at the same scale as the Grading Plan, except for the off site drainage areas mentioned above. Careful consideration must be given to accurately determine the lengths and slopes of channelized flow because of their influence in reducing the effective length of flow.

(6) Culverts. In the case of culverts, and also the outfall pipe of any enclosed pipe system, pipe sizes must be determined by the appropriate procedure and culvert formula given in Appendix B of TM 5-820-4. (To allow for sediment deposition, the "minimum" vertical diameter of cross drain culverts shall be 450 to 600 mm, using the respective State DOT's culvert design form, or Exhibit A-1-8 for the design). The A-E designer shall also inspect the outfall channel or drainage way below each outlet to determine if the outfall ditch should be protected with either riprap, ditch paving, or other suitable energy dissipator to prevent erosion, especially if outlet velocities exceed the maximum permissible mean velocities in Table 4-1, TM 5-820-4. The analysis <u>must</u> include calculations showing that outlet velocities have been reduced to permissible levels <u>before</u> being considered complete.

(7) Inlets and Other Structures.

(a) Inlets. Grated inlets (and occasionally weir inlets) are used in grassed areas. Curb type inlets are used when combination curb and gutter sections are used around paved vehicle parking areas. When curb inlets are located in the sag point of intersecting grades, the various inlets listed below are capable of passing the discharges shown, subject to other requirements specified hereinafter:

Type A*, single grate (600 mm x 900 mm) in grassed area
(120 mm Head, with F.S. of 2) = 4.0 c.f.s.
Type A, single grate (600 mm x 900 mm) in paved areas
(120 mm Head, with F.S. of 1.5) = 5.0 c.f.s.
Type B* (curb inlet, single trough) = 3.5 c.f.s.
Type B (curb inlet, double trough) = 6.5 c.f.s.
Type C* (curb inlet) = 1.4 c.f.s.

*See Exhibit A-1-1, Vol.III, for standard details of these inlets.

The capacity and spacing of the above inlets shall be selected and designed to adequately drain the project area in accordance with the requirements given in TM 5-820-4. When curb inlets are located on a slope, the capacity of the opening shall also be determined as specified in TM 5-820-4. The A-E designer shall include computations in his storm drainage design analysis indicating that the capacity and spacing of the curb type inlet(s) and the capacity of the grated type inlet(s) are satisfactory to prevent the design storm water runoff from either topping the curb, or building up to an objectionably wide area of flow along the gutter line and adjoining pavement.

(b) Other Structures. Headwalls shall be designed and detailed in accordance with job requirements and TM 5-820-4. Discharge/outlet channels shall be protected from possible erosion, as described above for culverts. All necessary protection shall conform to the requirements covered in the above referenced TM and appropriate detail sketches included in the site details of the contract drawings.

(8) When designing an enclosed storm drainage system for airfields, a 2-year design storm is usually required instead of the 10-year storm. In such cases, refer to Appendix A, Section 6, Specific Instructions to A-E, for further instructions. Also, refer to Fig. 1, Appendix B, TM 5-820-1 to determine the appropriate 2-year storm frequency, and substitute Table 1A, SAS Form 1154 (Exhibit A-1-5) for CESAS Form 1178 (Exhibit A-1-4) in the tabulation tables in the design analysis, following the procedure outlined in Appendix C, TM 5-820-1. It is important to remember that ponding <u>may be permitted</u>, but <u>only</u> when so stated in the Specific A-E Design Instructions.

(9) If applicable, also identify any state or local requirements for which the storm drain design must comply.

1.7.1.2 Pavement Design.

a. Complete flexible and rigid pavement design calculations consistent with requirements of the applicable TM's, based on the various design values presented in the Concept Design narrative and incorporating comments from review of the Concept Design submittal.

b. Present complete calculations for pavement options, describing the nature of the materials to be used in each pavement structure.

c. A Pavement Design Analysis is required to determine the thickness of flexible (bituminous) or rigid (concrete) pavements comprising drives, streets, parking areas, major highways, motor pool service areas, hardstands, aircraft parking aprons, taxiways, runways etc., when these features are indicated on the site plan. The format of the analysis shall follow, in general, the sample format included in Section A-1, Vol. III of this manual. (See Part I, Exhibit A-1-3.)

(1) Type of Pavement. Flexible pavement having a minimum thickness of 40 mm bituminous surface course (hot-plant mix), and 150 mm stabilized aggregate base course is usually specified for driveways and minor streets subject to light traffic and for passenger car (POV) parking areas. Thicker surface and base courses are required for the higher class roads, streets, drives and vehicle parking areas subjected to considerable truck traffic with heavy loads, and shoulders of airfield runways and taxiways. Rigid pavement is used for tactical equipment shop hardstands, aircraft parking aprons and all service areas where spillage of solvents (gasoline, oil and grease) occurs as a result of service and repair of vehicles, aircraft, and airfield runways and taxiways. (Reference the applicable technical manual (TM) listed in paragraph 2.2, concerning the type of pavement design required for the project.)

(2) Traffic. The A-E shall inspect the project site and confer with the using service (DEH/BCE) to secure an estimate of the type and size of vehicle(s) and the total number of vehicles anticipated to use the proposed pavements. The estimated traffic volume and type, except for pavement features noted in the TM's, are necessary to determine the design index (D.I.) to use in Figure 3 of TM 5-822-5 and the revised curves replacing Figure 1 of TM 5-822-6 for vehicle pavements, and the appropriate design curve(s) in the applicable TM/AFM covering airfield pavement design.

(3) Subgrade Soil Values. "CBR" and "k" values of the site soils are determined by the Government. For preliminary pavement design, the A-E will request a tentative CBR and K value from the District Project Manager. The values for final pavement design are usually furnished in the Foundation Design Report prepared by Soils Section (EN-GS) of the District's Geotechnical and Materials Branch (EN-G), upon receipt of final soil test results from the Division's Testing Laboratory. (See Chapter B-3.)

(4) Flexural Strength of Concrete. Rigid concrete pavements are designed for a minimum flexural strength of 4480 kPa in 28 days for vehicles and 4830 kPa at 90 days for aircraft. No other strengths will be acceptable, unless otherwise specified in Appendix A, Specific Instructions to the A-E.

(5) Aggregate Surfacing of Range Roads. Determine the thickness of crushed aggregate surfacing required for tank trails and other range roads, parking areas, etc. by following the same format as the design examples in the appropriate HNDM Range Design Manual or Supplement to TM 5-822-5, entitled "Design of Gravel Surfaced Hardstands." (See paragraph 1.2.2.2.)

(6) Compaction Requirements. Designate the minimum depths of required compaction, based on procedures described/illustrated in the applicable TM/AFM or HNDM.

Include sketches similar to those shown in the HNDM, TM, or the sample design analysis format (Exhibit A-1-3) referenced earlier.

1.7.1.3 Erosion Control.

a. General. Many different types/brand names of materials are available on today's market to aid in preventing soil erosion until the installed vegetation becomes well established. Generally, these protective measures are considered to be either short-term or long-term:

(1) Short-Term. Short-term or temporary measures to be considered during the construction period of the contract shall include, but not be limited to: phasing exposed soil areas and time of year; reducing the period of exposure by hydroseeding, planting or paving quickly; using straw/hay bale barriers/silt fences; mulches; matting; or settling ponds. In addition to the straw/hay bales, the mulches and matting may also consist of material that is bio/photodegradable.

(2) Long-Term. Long-term or permanent erosion control measures to be considered as part of the final project design may include, but not be limited to: grading, with the proper percent of slope to distance; any areas not paved/surfaced being established with permanent turf/grass; reducing the extent of grading to leave existing plants standing; installing ground covers/woody plants that will resist erosion; terracing; diversion channels, water bars, and ditching. Mats made of synthetic materials provide reinforcement that remains in place after the turf becomes fully established. Stone riprap, paved ditches, ditch checks, detention ponds, etc. may also be used, if erosion cannot be controlled as described by any of the above items. Additional "permanent" measures to consider include: concrete grids/interlocking pavers, grout-filled fabric mats (in lieu of stone riprap), and concrete block systems. Geocells/geonets, often incorporating a layer of geotechnical fabric, are other synthetic measures currently in use to stabilize cut/fill slopes and enhance drainage. (See paragraph 1.6.2.7.)

b. Specific. The A-E designer shall furnish a "complete" analysis consisting of a narrative describing <u>all</u> protective measures proposed, plus calculations to document/"back up" how the protective measures were sized. (The designer shall refer to the appropriate chapter in the applicable State Design Manual referenced in paragraph 1.6.2.7 and comply accordingly.)

1.7.1.4 Landscaping Design. When landscaping is required, the descriptive narrative, list of plant materials, and cost estimate from the concept design submittal shall be revised to correspond with the development of the preliminary planting plan. The A-E designer shall prepare the outline specification(s) and approximate grassing and plant list quantities for the preliminary design submittal utilizing the recommended Plant List for the appropriate military installation and incorporating review comments from the concept design submittal. The quantities of grassing and plant materials shall be included in the preliminary cost estimate. (See paragraph 1.6.2.9).

1.7.1.5 Berm Design (For Ranges).

a. Present complete design of protective target and transformer berms, consistent with the requirements of the applicable HNDM and pertinent design values presented at the Predesign Conference, and incorporating any review comments from the Concept Design Submittal.

b. Include complete design calculations and sketches for both homogeneous and composite target berm options, in the same format as the design examples in the appropriate HNDM.

1.7.2 Preliminary Design Drawings. Unless otherwise instructed in Appendix A, Section 6, of the "Specific A-E Instructions," the Concept Design Submittal's "composite" Site Plan shall be expanded into the following separate site plans for this and subsequent Final (100 Percent) design submittals:

a. Existing Topography Plan (Plate C-2).

b. Removal Plan (Plate C-3).

c. Layout Plan (Plate C-4).

d. Grading, Paving, and Storm Drainage Plan (Plate C-5).

e. Erosion Control Plan (Plate C-6).

Although the major items of work should be shown separately, different items of sitework may be shown on the same sheet, provided the presentation is sufficiently clear to permit legible reproduction at half-scale.

1.7.2.1 Index of Drawings. Normally, the "Index of Drawings" is a separate sheet (Plate X-1) listing plate numbers and titles. However, for some projects, the index information may be placed on the Location Plan, if space is available. (See Chapter A-10 for additional guidance.)

1.7.2.2 Location Plan. (Normally completed by the 60 percent design submittal, based on incorporation of comments from the concept design review.) The Location Plan (Plate C-1) shall show the location of the project site in relation to the overall military reservation, and is usually drawn to a scale of 1 m = 10000 m to 1 m = 40000 m. When projects are located on an established Government reservation, the District Project Manager shall furnish a reproducible Installation Site Plan for the A-E to use in preparing the Location Plan. (The A-E should request the Savannah District Project Manager to furnish the reproducible drawing, which usually includes a Vicinity Map.) This plan will also be used to indicate the location(s) of permissible/designated access and haul routes through the reservation, and show designated earth borrow, disposal, or waste areas, when required for the project. Configuration of the new work, with line item designation, shall be drafted prominently thereon. The A-E shall contact the Base Civil Engineer (BCE) of the Air Force Installation, or the Director of Engineering and Housing (DEH) of the Army Installation

where the project is located and request the designated haul route(s) to the project, and the location of a suitable borrow or disposal area, if available on the Government reservation. Also, if needed for the project, indicate the permissible haul route(s) from the project site to these areas, and the area designated for Contractor's material storage and field office adjacent to or on the project site. (See paragraph 1.9.2.) If borrow and disposal areas are not available on the military reservation, appropriate General Notes shall be added for information purposes. In addition to the DEH/BCE, also show location(s) of nearest fire and police/security station(s), including building and telephone numbers.

1.7.2.3 Existing Topography Plan. The Existing Topography Plan (Plate C-2), shall consist of a drawing or drawings prepared from the topographic survey sheets at the same scale as the composite "Site Plan" in the Concept Design Submittal. (Preferably 1 m = 400 m, but 1 m = 250 m is also acceptable for small project sites.) This plan should show all existing site features (topography, contours, structures, utilities, roads, etc.), with contours extended a minimum of 15 m outside site boundaries to show surface drainage. The date and origin of the survey shall also be shown near the title block. (See paragraph 1.3.1.3). In addition, include a legend showing all items of sitework and reference same on all subsequent Site Plan C-Plates.

1.7.2.4 Removal/Demolition Plan (Plate C-3). To assure clarity of the Grading, Paving and Storm Drainage Plan, an additional site plan showing removal, relocation, demolition and removal/salvage of existing buildings, roads, drainage structures, etc. shall be included. Preferably, this plan shall also be at the same scale as the "Existing Topography Plan." If not delineated on the Removal Plan, include a note stating the Grading Plan shows the limits of clearing and grubbing/the extent of area to be disturbed (construction limit line (CLL)) by the Contractor's construction operations.

1.7.2.5 Layout Plan (Plate C-4).

a. Complete a geometric layout of all items of new sitework, using offset dimensions from existing structures or a referenced construction base line (B/L) to be located in the field by the Contractor and maintained throughout the life of the project. If necessary, use coordinates for locating new work, especially major road networks and buildings complexes. (See paragraph 1.9.5 for additional guidance.)

b. Locate or reference monuments for horizontal control for Contractor's use in laying out the project.

c. Include references to standard figures, or reference particular details in the "Site Details" C-Plates for specific items of sitework. Unless modified herein, all handicapped requirements shall comply with the "Uniform Federal Accessibility Standards (UFAS)."

d. Complete the legend (para. 1.6.2.3) to include symbols for all items of sitework shown on the Layout Plan. Symbols should be consistent between successive C-Plate drawings. (Refer to Figure 1, Exhibit A-1-1 for sample legend and District Drafting Standards for additional symbols.)

e. On large projects, preferably exclude contour lines for ease of review.

1.7.2.6 Grading, Paving, and Storm Drainage Plan (Plate C-5).

a. Indicate all items of new work, superimposed on the existing topography, including soil boring locations and designations from the boring location plan furnished by Savannah District's Soils Section (EN-GS). Specific instructions concerning soils data for structures will be provided in the Foundation Design Report also furnished by EN-GS, as discussed in Chapter B-3.

b. In general, the Grading, Paving and Storm Drainage Plan for each project site shall be developed on the existing topography at a scale of 1 m = 400 m or 1 m = 250 m, with the scale shown in the title block and also by graphic or bar scale.

(1) This plan shall exclude all new work involving sanitary sewage, water supply, electrical distribution, steam distribution and other exterior utilities, other than storm drainage. These utilities, excluding storm drainage, shall be shown on the appropriate drawings of the other design disciplines. However, all existing utilities and features, must be indicated or identified by appropriate symbol in the legend. (For depicting grading, paving and storm drainage items, refer to sample legend furnished in Figure 1, Exhibit A-1-1.)

(2) Earth shoulders of appropriate width should generally slope 13 mm per meter. Cut and fill slopes for overall sitework shall not be steeper than 4 horizontal to 1 vertical (4:1), except for unusual conditions or cases where steeper slopes are necessary to prevent encroachment on existing structures, or perhaps in remote outfall ditch areas. For roadway projects, the cut and fill slopes shall be based on using 4:1 for fill heights up to 1.8 m, 3:1 for heights of 1.8 m to 3 m, and 2:1 for fill heights over 3 m. (Unless otherwise approved by the Savannah District's Site Development Section (EN-GD), in no case shall earth slopes be steeper than 2:1.)

(3) The Construction Limit Line (CLL) denotes the limits of clearing and grubbing and extent of disturbed area (usually 3 m beyond top of back slope of cut or toe of fill slope).

(4) At least one BM/TBM convenient to the construction site must be shown and described on each sheet of the Grading, Paving, and Storm Drainage Plan. Indicate the finished floor elevation (FFE) of all new building(s) and provide finish grade spot elevations at building corners, along sidewalks, edges of paved areas, etc, to prevent ponding and assure positive drainage away from the structure(s) to/toward inlets to the storm drainage system.

(5) Differentiate clearly between new and existing contours, as shown in the District Drafting Standards. New contour lines are to be heavy and tie into the appropriate existing contours. Existing contours over earth and paved areas are properly drafted free hand. Top of new pavements (T.P.), finished earth grades (F.G.), top of new curb grade (T.C.), etc, must be shown at all strategic grading points such as storm drain inlets, grade breaks,

pavement corners, at P.C. or P.T. of pavement radii, along sidewalks, and at all points necessary to establish the new grading pattern.

(6) Channelized storm water runoff over sidewalks must be avoided by providing diversions, inlets, or cross drain pipe to intercept the runoff. Transverse runoff originating from extensive earth areas shall not be permitted across paved parking areas at <u>any</u> time. Such runoff <u>must</u> be intercepted before reaching the pavement.

(7) Maximum acceptable longitudinal grade on sidewalks is 15 percent, but grades steeper than 10 percent shall be avoided wherever possible (refer to TM 5-822-2 and 5-803-5). Transverse grades shall not be less than 7 mm per meter, nor more than 13 mm per meter. Where steps are required in sidewalks and eight or more risers are required, the steps should be split into separate groups with landings between. (Additional design information concerning steps in sidewalks is covered in TM 5-803-5.) When sidewalks are to also serve as driveways, the minimum thickness shall be increased accordingly or reinforcing steel added to support the anticipated vehicle wheel loadings.

(8) Radii at roadway and street intersections and turnouts shall usually be dimensioned to back of curb, unless noted otherwise. Existing spot grade elevations at intersections of existing and new pavements <u>must</u> be indicated to assure designing smooth tie-ins.

(9) Where the grading layout extends over more than one sheet, neat match lines shall be used to indicate breaks in topography. Overlaps, overruns, or repetitions in the layout will not be permitted.

(10) The A-E designer shall visit the site during the design period to assure that new and existing grading, paving, and storm drainage work are properly coordinated with other design disciplines, as referenced earlier in paragraph 1.6c(1). During the site inspection, the A-E shall also determine the feasibility of preserving existing trees and the natural terrain's compatibility with other site grading requirements and landscaping, when required.

(11) Grading and Surface Drainage.

(a) Site grading shall be designed to avoid/reduce erosion where possible, yet assure protection to buildings and pavements by providing controlled runoff of surface water. Finished earth grades adjacent to buildings and pavements shall be sloped away from the immediate area at a rate of at least 2 percent in 3 m. Site conditions and facility requirements will govern exact site grading requirements in open areas, but graded earth slopes should not be less than 1 percent before channelization occurs, except on special occasions. Steep earth grades around splash blocks and riprapped storm drain outlets shall be avoided at all times to prevent soil erosion. Large open graded areas and extensive back slopes may require further protection with interceptor and diversion terraces, ditches and inlets.

(b) Grading for roadway pavement transverse slopes shall be a minimum of 7 mm per meter, except at transition points with intersecting roadways where the slopes must vary as a function of the roadway design grade(s).

(c) Parking Areas. Surface grades in parking areas shall be held to the minimum required for drainage, but shall be not less than 1 percent, measured perpendicular to the finished grade contours. For safety reasons, the maximum cross slope grades for parking areas designed for 90-degree parking are 8 percent along the aisles through the area and 1-1/2 percent for the transverse slope. For parking areas designed for 60-degree and 45-degree parking, the maximum cross slope grades are 5 percent along the aisles through the area and 1 percent for the transverse slope. Combination curb and gutter shall usually be used around all vehicle parking area(s) and also along approach drives to control surface drainage, provide vehicle barriers and present a neat appearance. The curb and gutter shall be sloped a minimum of 0.30 percent to prevent ponding and assure positive drainage to curb inlets. Parking spaces shall be 2.8 m wide and 5 m long with overhand measured to face of curb or 5.5 m long without overhang. Aisles and access lanes will be 7.3 m wide. Light fixtures require concrete pedestals to prevent vehicle damage to the light poles. (Additional data is contained in TM 5-803-5, "Installation Design.")

(d) Locate the new storm drainage system using the symbols included in the legend and indicate the direction of pipe and surface flow. Identify drainage structures with number designations corresponding to same used in the storm drainage design analysis and the pipe and structure schedule (Figure 39, Exhibit A-1-1) included in the drawings details.

(12) Paving. The above paragraphs specify the basic grading requirements. For vehicle roads and parking areas, flexible pavement shall be designed in accordance with procedures specified in TM 5-822-5, and rigid pavement in accordance with procedures specified in TM 5-822-6. (Refer to paragraph 1.6.1.2). Both rigid and flexible airfield paving shall be designed in accordance with applicable revised design curves furnished with the ETL's to the applicable airfield design TM/AFM listed in paragraph 1.2.

(13) Pavement Markings. Double parking stripes shall be painted in parking areas, unless otherwise specified. (See Fig 26, Exhibit A-1-1). Also, when specified, traffic arrows and other markings shall comply with requirements in the "Manual on Uniform Traffic Control Devices," published by the Federal Highway Administration of the U.S. Department of Transportation.

(14) Grassing. All newly graded earth areas, slopes, ditches, and other disturbed areas shall be grassed. A temporary winter cover crop shall be specified in the event the finish grading is anticipated to be completed during seasons unfavorable to establishment of permanent grasses.

1.7.2.7 Erosion Control Plan (Plate C-6). Except for modifications or additions specified in Appendix A, Section 6, of the Specific A-E Design Instructions, Erosion Control Plans showing <u>all</u> protective measures recommended to retard/prevent soil erosion/retain

sedimentation on the project site shall be prepared in accordance with criteria contained in the following applicable State Publications:

a. Georgia. MANUAL FOR EROSION AND SEDIMENT CONTROL IN GEORGIA, 1996 or later Edition. (Chapter 3 of this manual contains "sample" Erosion Control Plans.)

b. North Carolina.

(1) EROSION AND SEDIMENTATION CONTROL PLANNING AND DESIGN MANUAL, September 1994 or later Edition. (Chapter 7 of this manual also includes a Sample Erosion and Sedimentation Control Plan and checklist.)

(2) GUIDE FOR SEDIMENT CONTROL ON CONSTRUCTION SITES, Aug. 79 or later revision. (This publication has been superseded by the above manual.)

c. South Carolina.

(1) A Guide to Site Development and Best Management Practices for Storm Water Management and Sediment Control (1992)

(2) Storm Water Management and Sediment Control Handbook for Land Disturbance Activities, 1995

The above referenced manuals outline the specified procedures and practices to be followed, and contain "sample" Erosion and Sedimentation Control Plans, details, etc. However, do <u>not</u> submit the Erosion Control Plan to the State Agency specified in either of these manuals.

1.7.2.8 Miscellaneous Site Details. Drawings shall include the following details, as applicable:

a. Standard Details. Standard details (See Exhibit A-1-1) shall include: Typical pavement section(s); curb and gutter and surface inlet(s); manhole frame(s) and cover(s); grate cover(s); headwalls; and sidewalks, as required. Generally, where concrete curb and gutter is used to control surface drainage, curb and gutter inlets will be used to intercept runoff from vehicular pavements. Grate or weir type inlets shall be used in turfed areas, but <u>only</u> grated inlets in aircraft pavements.

b. Minimum pavement thickness and depth of compaction requirements, same as shown in the pavement design analysis, unless compaction requirements included in tabular form in the applicable site grading specification.

c. A concrete joint layout plan and joint details <u>must</u> be included for vehicle hardstands and aircraft parking areas showing the location, type of joint, and dimensions between joints. Joint details shall conform to the applicable details shown on Savannah District's "Non-Reinforced Vehicle/Airfield Pavement Details," based on OCE Standard Drawing Nos. 40-17-01 and 40-17-02, Sheet No 1. (Standard Joint Detail will be furnished upon request

to the District Project Manager.) The Joint Layout Plan is required for all rigid concrete pavements, unless instructed otherwise by the District's Site Development Section (EN-GD) in Appendix A, Section 6, of the Specific A-E Instructions.

d. Sidewalk width, and length of joint layout, with Installation Notes to Contractor (Figure 28, Exhibit A-1-1).

e. Storm Drain Pipe Profiles. Profiles for concrete, clay, or Type "D" corrugated metal pipe shall be included on the contract drawings. Show existing ground line, finished grades, drainage structures, invert elevations, pipe slope, sizes, and lengths, but not the hydraulic gradient. Profiles for the optional Type "A" corrugated metal pipe are also required when the pipe diameter and invert elevation(s) of the inlet(s) and manhole structure(s) are different from those indicated for concrete pipe. Intersecting sanitary sewers, water lines and other underground utilities crossing the storm drain line shall be shown on the profile(s) at their proper elevation. Pipes that conflict at crossings shall be adjusted. Any conflict with intersecting utility line crossings shall be appropriately adjusted with adequate details included. (For description of Type "D" and Type "A" corrugated metal pipe, see Exhibit A-1-2, "Storm Drainage Design Instructions for Roadways and Built-Over Areas.)" To simplify showing storm drainage data, a "Storm Drainage Pipe and Structure Schedule" (Figure 39, Exhibit A-1-1), including the appropriate Construction Notes shall also be included in the Site Details.

f. Dimensions of vehicle parking spaces, including handicapped parking when required (Figures 26A and 26B, Exhibit A-1-1).

g. Chain Link Fence. When required for general security, chain link fence normally shall be a height of 2.15 m, plus barbed wire top (Type FE-6). (Refer to Savannah District's Standard Fence Detail, based on OCE Standard Drawing No. 40-16-08. A reproducible is available on request from the Savannah District Project Manager, as specified in Chapter A-10.) For athletic fields, request copy of Standard Drawing 40-16-09 or TM 5-803-10. Standard Drawing 40-16-10 shows additional security requirements for ammunition storage areas and other areas where strict security requirements are desired.

h. Special Details.

(1) These shall include longitudinal profile grades which must show approximate existing ground line, P.C. P.I., and P.T.'s, gradients, intersecting drain pipes, and new top of pavement grade elevations. At intersections where pavement grades must be warped for proper drainage, a 1 m = 100 m scale detail with contours drawn at 30 mm or 60 mm intervals (depending on steepness and grades) shall be included.

(2) At least one typical/site section through the building and paved and graded areas should be included to illustrate the relationship of the FFE of the building(s) to the graded and paved slopes on the project site.

(3) Erosion Control Measures. Refer to the applicable State Design Manual listed in paragraph 1.6.2.7 and Figures 41-43, Exhibit A-1-1, Vol. III of this manual.

(4) Special Details for Airfields. When required, any additional data necessary for design of airfield storm drainage or paving will be included in Appendix A, Section 6, of the Specific A-E Instruction.

(5) Firing Lane C/L Profiles for all range designs.

(6) Details from State DOT Standard Drawings are also acceptable, when required to show details not included in Exhibit A-1-1.

1.7.2.9 Plan and Profile Sheets. When required, as specified in paragraph 1.9.5.

a. For a recreation area road complex or range trail design, show the construction centerline, right-of-way limits, and all important topographical features such as fences, buildings, stream and railroad crossings, etc., on the plan view.

(1) For Contractor's information, locate or reference monuments and bench marks (BM's) with both horizontal and vertical control to expedite construction operations.

(2) Provide complete survey information necessary for establishing the proposed roadway centerline including: computed bearings of all tangents; coordinates of all points of beginning (P.C.), points of ending (P.T.), points of tangent intersection (P.I.'s), and other curve data (I, E, L, etc.), for all horizontal curves in the proposed road alignment.

(3) Superelevation and widening details of roads, when required. When superelevation is required, include on the drawings a diagrammatic profile of how the superelevation is obtained; a table of shoulder slope(s) vs. cross slope(s) for the superelevated section; or, reference standard figures or tables included on the drawings.

(4) Note on the plan view the type and size of all "existing" drainage structures and the manner in which they are to be removed, utilized or otherwise affected by "new" work. Also, indicate locations of "new" cross drains, including inlet and outlet channels when required.

b. Plot the "proposed" centerline on the profile portion of the sheet at the same horizontal scale as the plan view. (Normally, use a vertical scale of 1 m = 200 m, or as appropriate to fit the site terrain.) Indicate the "existing" ground line at each centerline station on the profile, including both banks and channel bottom of stream crossings.

(1) Provide centerline (C/L) grade elevations at each 30 m station on tangents and each 10 m station in vertical curves.

(2) Indicate the degree (percent) and length of all vertical curves. Include layout data (V, PVC, PVT, etc.) for each curve.

(3) Indicate the percentage/degree of slope for all proposed grade lines and provide elevations at points where grade changes occur. Provide special information pertaining to

the profile and affecting the design, such as: curb grades, gutter grades, channel invert and top elevations of bridges, etc.

(4) Show correct locations and invert and top elevation(s) of both new and existing storm drainage structures on each profile. Indicate size and length of each structure.

1.7.2.10 Landscape Plan, (Plates L-1, L-2, etc).

a. A-E Qualifications. When landscaping is required, the prime A-E shall obtain the services of a qualified Landscape Architect who is experienced in site planning and planting design, and preferably registered in the State in which the work is to be done. In addition, the Landscape Architect should also be thoroughly familiar with the Technical Manuals, standards and specifications referenced herein.

b. The Preliminary Design Submittal shall expand the concept design by developing an overall planting layout. The A-E shall furnish the Landscape Architect with information indicating the proposed location of all exterior utilities prior to beginning landscaping design. The preliminary design drawings and all subsequent plans shall indicate both existing and proposed buildings, paved areas, signs, light standards, transformers, dumpster pads, storm drainage lines, and other utilities and structures. Foundation plantings, shrubs, and ground covers may be used to create a desirable setting, and to screen objectionable areas, but not to control traffic and other similar uses. All foundation planting(s) may be shown at a legible scale and shall indicate the location of doors and windows, and any other feature of the building influencing the landscaping design. Enlarged detailed plans of specific areas may be included as needed to clarify requirements. The preliminary plan(s) shall show the common name, exterior utilities, north arrow, legend, and scale on the L-Plate drawings.

c. The Landscape Plan shall be an integral part of the planning and construction of the proposed project. (See Paragraph 1.9.6.) In selecting plants, attention should be given to maintenance, hardiness, ultimate effect and grouping. The planting design shall be informal, simple and composed of plants native to the area, with emphasis on trees. The proposed Landscaping Plan shall indicate shade trees, evergreen trees, flowering trees, shrub masses, etc., according to designated functional and visual locations of plantings. The scale of the tree planting plan shall be at a legible scale such as 1 m = 400 m. This plan need not indicate wall openings. A plant list indicating the sizes of plants recommended for each of the above categories shall also be included. (See Exhibit A-1-1, Figures 44 through 49, as applicable.) Each plant shall be indicated as a mature plant by one size and name or type symbol throughout the project design, excluding ground cover(s) which may be indicated as a mass showing the area to be covered. On the plan, the plant name or key symbol for each plant type shall follow the quantity in a location or grouping; i.e., QP or 4-Willow Oak.

d. The Landscape Plan (Plate L-1), shall be included with the Preliminary (60 Percent) Design Submittal. (If "existing" and "proposed" contour elevations are considered critical to the landscaping layout, an overlay of the landscaping drawing(s) shall show both the "existing" and "proposed" spot grades and contour elevations.) Grassing limits or notes

shall be shown on Landscaping Plan(s) or, the areas to be grassed shall be indicated on both the Grading/Erosion Control Plan and the Landscaping Plan. Unless otherwise directed, the following additional items shall always be considered:

(1) Removal of existing trees shall be only as absolutely necessary for construction.

(2) The plant materials installed shall be hardy and require minimum care/upkeep to reduce overall maintenance costs of the new facility.

(3) The planting design should reduce noise and glare, modify wind and temperature, control dust and erosion, and be compatible with the proposed exterior lighting plan of the project site. Plants shall not block overhead streetlights nor exhaust vents of building ventilation and air conditioning systems.

(4) Plants should also not interfere with underground utility lines. Accordingly, major and minor trees should not be located closer than 7500 mm (25 feet) and shrubs closer than 1500 mm (5 feet) from sanitary sewer lines.

(5) Plants should not interfere with safe sight lines of either pedestrians or drivers at street, and road and driveway intersections.

e. Coordination. Landscaping plans shall also be coordinated with "existing" site conditions and the Removal, Layout, Grading, Paving, Storm Drainage, and Erosion Control Plans; architectural floor plans and elevations; and pertinent aspects of utilities (mechanical, plumbing, and electrical) drawings for proper location of items such as air compressors, fuel oil tanks, electrical transformers, meters, light standards, hose bibs and fire plugs. (Reference paragraph 1.6b.) Coordination of COE and Installation User (DEH/BCE) requirements shall be accomplished prior to beginning preliminary design. The A-E designer shall contact the local user and other installation personnel to substantiate the extent of design requirements and provide planting proposals, which correspond with available maintenance capabilities.

1.7.3 Outline/Draft Project Specifications.

a. If not approved in the Concept Design review, the preliminary outline specifications shall consist of a list of guide specifications from paragraph 1.10 considered applicable to site development of the proposed project design, with a brief description of deviations or omissions in compliance with Chapter A-11 of this manual. (See Exhibit A-1-9, Vol. III, for sample outline specification format.)

b. If approved in the Concept Design review, the A-E shall submit draft project specifications, as described in paragraph 1.7.3.

1.7.4 Preliminary Sitework Quantities and Unit Price Schedule(s).

All items of proposed sitework must be included in the Preliminary Cost Estimate by incorporating review comments from the Concept Design Submittal. See paragraph 1.9.4

for additional guidance, and Chapter A-9 for correct format and more detailed guidance in preparing estimated sitework quantities and unit price schedule(s).

1.7.5 State Erosion Control Plan

The State Erosion Control Plan will consist of a separate package that includes the erosion control drawings, erosion narrative, erosion design analysis and specifications pertaining to erosion controls required by the State Design Manual. (Reference paragraph 1.6.2.7). The A-E will provide five copies of the package to the Project Manager along with the preliminary design submittal or 60 days prior to the final submittal, if there is no preliminary submittal required. The State Erosion Control Plan package is to be submitted in abbreviated form with the concept submittal. The recommended locations of both temporary and permanent erosion control measures shall be shown on the ECP, with detail sketches of same included in the "Site Details" of the drawings.

1.8 **FINAL (100 PERCENT) DESIGN SUBMITTAL REQUIREMENTS.**

a. General. A-E designer shall advance project design to completion, complying with/incorporating comments received from review of the Concept/Preliminary Design Submittal(s). When submitted for review, final design submittals are supposed to be "Ready to Advertise" (RTA), when received by Savannah District.

b. Specific. Whenever the final design is to be based on an approved Concept (35 Percent) Design Submittal (Concept-Final), the A-E designer shall refer to paragraph 1.6, "Preliminary (60 Percent) Design Submittal Requirements" for guidance in preparing a complete design, including: developing detailed storm drainage, pavement, and erosion control design analyses, final drawings, draft project specifications, and final sitework quantities. Also, refer to paragraph 1.9 for additional guidance, and the "Checklist for A-E's Review" (Exhibit A-1-10, Vol.III of this manual).

1.8.1 Final Design Analyses. Update/revise previously submitted analyses to support final plans and specifications, as noted above. Assemble the analyses in booklet format, including both original and revised dates of preparation, when applicable, and showing the names of both preparer and checker. (Reference Exhibit A-1-3, Vol. III). If acceptable analyses were furnished with either the Concept/Preliminary Design Submittal, no additional analyses will be required.

1.8.1.1 Storm Drainage Design. If an acceptable analysis is not furnished and extensive revisions are required, due to incorporation of review comments, the A-E Designer must resubmit either all/or part of the analysis revised to comply with either the Concept or Preliminary Design review comments. Remember to include the DA Map at the end of the analysis booklet. (Reference paragraph 1.6.1.1b(4).)

1.8.1.2 Pavement Design. When revisions are required, the A-E designer must resubmit the analysis, same as noted above for the storm drainage design.

1.8.1.3 Berm Design (For Ranges). When revisions are required, the A-E designer must resubmit the revised analysis, same as noted above for the storm drainage design.

1.8.1.4 Erosion Control. Same as noted above for the storm drainage design. If a preliminary submittal was not required, a State Erosion Control Plan must be submitted 60 days prior to final design submittal due date. (Reference 1.6.5.)

1.8.1.5 Landscaping Design. When required by Appendix A, Section 6, "Specific A-E Instructions," landscaping design shall consist of preparing "complete" landscape studies, drawings, and specifications. The design shall be based on all general and specific criteria (standard drawings, manuals, etc.) referenced in paragraphs 1.6.2.9. and 1.9.6.

1.8.2 Final Design Drawings.

1.8.2.1 Preparation of final site plan drawings (P/L-Plates) for site development design shall be based on revising the concept or preliminary design drawings, as required, to develop Site Plan drawings with sufficient information to permit proper layout and construction. The final drawings shall reflect revisions resulting from incorporating the concept or preliminary design review comments, shall be uncluttered, neatly drawn and lettered, and capable of assuring clarity at half-size reproduction. All drawings not neatly rendered/not considered capable of clear half-size reproduction will not be accepted, but will be returned to the A-E for redrafting. The final P-Plate drawings shall also include all pertinent details such as: typical pavement sections, storm drainage inlets and manholes, curb and gutter sections, etc. Sample sketches from "Standard Detail Sketches - Grading, Paving, Storm Drainage and Landscaping" (Exhibit A-1-1), Vol. III of this manual, shall be used for these details. Drawings may be modified by the A-E designer when necessary to conform to specific field conditions, as specified in paragraph 1.6.2.8.

a. Add appropriate General Notes to each plate of the drawings, as required.

b. Provide adequate cross referencing between site plan drawings for appropriate details, sections, match lines, other design disciplines, etc.

c. Eliminate any possible conflicts (horizontal and vertical) between site development and architectural, structural, and utilities drawings by coordinating with other design disciplines, as specified in paragraph 1.6b(2).

1.8.2.2 Final site development drawings shall also include a P-Plate showing the location and type of all soil borings, identifying each type (auger/split spoon, etc.) in the legend, and including the note referencing Appendix A of the specifications. (Generally, the Site Grading Plan is preferred for this purpose, as noted in paragraph 1.6.2.6 and Chapter B-3.)

1.8.2.3 Final Landscape Drawings (L-Plates) shall indicate proposed plants by a (+) mark for the plant location and a circle scaled at approximately 2/3 the ultimate canopy growth spread (diameter) of trees and shrubs. Also, include a "complete" schedule or plant list of materials listing both botanical and common name(s), plan symbols, quantities, sizes and condition furnished. Final drawings shall also include the basic detail sketches for

installation of tree, shrub and ground cover plantings, plus any other applicable details for clarification of specific project requirements. (See Exhibit A-1-1, Figures 44 through 49, as applicable.) Pertinent notes, applicable to construction requirements, in addition to standard notes, shall also be included. The final landscape plan, plant schedule, details, notes, specifications, and cost estimate shall all agree.

1.8.3 Final Draft Project Specifications.

a. Before beginning preparation of draft project specifications, the A-E designer shall refer to the "Supplement to District Guide Specifications" (Exhibit A-11-16), and request copies of the latest guide specifications from paragraph 1.10, covering all items of anticipated sitework before beginning final design. Periodically, some of the guide specifications are revised/updated, sometimes between the time the A-E first begins project design and the District Project Manager requests preparation of the draft project specifications. (Reference Chapter A-11, Vol. II, and Exhibit A-11-3, Vol. III of this manual.)

b. Ensure consistency of terminology between drawings and specifications for specific items of work by appropriate notations on drawings.

c. Check to assure adequate referencing to standard detail sketches included in the site details for construction, as per paragraph 1.6.2.8. Details for site development are never included in the specifications, only in the drawings. The applicable figures from the "Supplement to District Guide Specifications" (Exhibit A-11-16) shall be inserted at the end of the appropriate specification section(s), as explained in Chapter A-11.

d. When required, landscape specifications shall be based upon the current Standard Specification edited for specific project requirements, the IDG for the particular military installation, and the applicable TM/AFM listed in paragraph 1.2.

e. To expedite EN-GD's review of the draft project specifications covering all proposed items of site development, the A-E shall include the "marked up" guide specification sections, as specified in Chapter A-11, and Exhibit A-11-3.

1.8.4 Final Sitework Quantities.

a. The A-E shall furnish the District Project Manager clear copies in reproducible form of all computations, cross sections, backup sheets, and takeoff of estimated quantities for all items of sitework applicable to site development.

b. For general building sites, including vehicle parking areas and drives, earthwork quantities (excavation, borrow, or combination of both) resulting from site grading shall be estimated by cross sections plotted to suitable scale at 30 m intervals or less, in accordance with the requirements of paragraph 1.9.5. Since the Site Grading Plan normally includes both existing and finished grade contours, it is not necessary to include earthwork cross sections with the contract drawings to be issued to bidders, except for project designs containing a road network complex. (See paragraph 1.9.5.) Therefore,

these cross sections shall be considered as work sheets for computation purposes only, and preparation in heavy pencil on reproducible cross section paper will be satisfactory. Proper compaction shrinkage factors shall be applied to both fill and backfill quantities. Suitable allowance shall be made for subsidence when considered necessary, and the excavation and earthfill quantities shall be adjusted for removal and replacement of unsatisfactory soils, as may be required by the Foundation Design Report prepared by Savannah District's Soils Section (EN-GS). End areas shall be shown, as well as subtotals and totals of the earthwork on each sheet. The use of Standard State Highway/DOT cross-section sheets will be acceptable.

c. The A-E may elect to utilize Computer Aided Design and Drafting (CADD) equipment for plotting cross-sections and calculating earthwork quantities. If so, these computer programs must be based on "established" methods of design, (i.e. "Average End Area Method") for volume calculations. The A-E shall, with the CADD printouts/plots, submit sufficient "raw" data to enable noncomputer oriented personnel to reproduce either all or part of the analysis without the aid of computer equipment. In addition, the A-E shall submit a minimum of one "manual" calculation iteration that "checks" the computer analysis. (Also, reference paragraph 1.9.5g.)

d. When it is apparent that the quantity of site grading is small (less than 3800 cubic meters excavation and borrow), the A-E may compute the earthwork by other conventional methods, if approved by the Savannah District's Site Development Section (EN-GD), and backup data is furnished for the District Project file.

e. When designing airfield pavements and extensive vehicle roadway networks, earthwork quantities shall be computed from plotted cross sections in accordance with paragraph 1.9.5.

f. To ascertain the scope of the project, a complete list of estimated sitework quantities shall be prepared for each project site, consisting of but not limited to the following standard items and units:

Item of Work	Unit
Unclassified Excavation	CM
Unclassified Borrow	CM
Excavating Topsoil from Stockpiles	CM
Stabilized Aggregate Base Course	SM
Bituminous Prime Coat	L
Bituminous Tack Coat	L
Bituminous Surface Course (Hot-Plant Mix)	SM.
Seeding Temporary Cover	HA (Hectare)
Storm Drain Pipe (size and type)	LM
Inlet or Manhole	Each
Concrete Curb and Gutter	LM
Concrete Sidewalks	SM
Turf Establishment (Grassing)	HA

Mulching	HA
Removals (list individual items)	Each
Fencing (Type and Height)	LM
Erosion Control Measures	Each

g. The revised final takeoff of estimated sitework quantities for site development's portion of the project design shall reflect incorporation of EN-GD's review comments of the A-E's previous design submittal(s), and also show the original and revised dates of preparation, when applicable. (Refer to paragraph 1.9.4 herein and Chapter A-9 of this manual for detailed guidance.)

1.9 **CORRECTED FINAL DESIGN SUBMITTAL REQUIREMENTS.** The corrected final design submittal is not considered to be a "normal" design submittal, but will be required in those cases where the review comments of the final design indicate several revisions are necessary to correct A-E design error(s) or omission(s) in the Final (100 Percent) Design Submittal.

1.9.1 Corrected Final Design Analyses. Revise the analyses to support the corrected requirements for paving, storm drainage, erosion control, and protective berm designs for the project, by incorporating review comments received from the Final (100 Percent) Design Submittal.

1.9.2 Corrected Final Design Drawings. Revise thoroughly checked drawings, same as above for the design analyses. (See Chapter A-10 for detailed guidance.)

1.9.3 Corrected Final Project Specifications and Sitework Quantities. Same as above for design analyses and drawings. (See Chapters A-9 and A-11 for guidance.)

1.10 **MISCELLANEOUS DESIGN REQUIREMENTS FOR SITE DEVELOPMENT.**

1.10.1 Engineering Manuals. Paragraph 1.2 includes a list of the most commonly used design manuals (TM/AFM's), etc., applicable to designing the site development portion of military projects. The A-E designer shall request the District Project Manager to furnish the "latest" editions of the applicable design manuals at the beginning of project design.

1.10.2 Earthfill Borrow or Waste Materials. Insofar as possible, site grading shall be developed to achieve a balance of cut and fill in computing earthwork quantities. Suitable allowance shall be made for shrinkage of fill quantities due to specified compaction effort required. To establish the quantity of excavation necessary for the earthfill, the embankment (fill) should be increased by approximately 25 to 35 percent for cohesionless soils (sands) and 25 percent for cohesive soils, unless otherwise instructed.

a. For Projects Located on Government Reservations. The A-E designer shall determine whether earth borrow or disposal of surplus earthfill and other waste material will be required, and the quantity of material involved. The grading specification(s) shall be written to indicate whether earthfill borrow or disposal of waste material will occur on the military reservation. The designer should visit the site with the Director of Engineering and

Housing (DEH) or Base Civil Engineer (BCE) to determine the location and limits of borrow area containing suitable soils, disposal area, and permissible haul routes through the reservation. (The designated haul route(s) may not always be the most direct route.)

b. Unsuitable Soils. All unsuitable soils (gumbo, trash, organic soils, and highly plastic clay soils) determined by site inspection(s) and boring logs, shall be removed from areas within the limits of construction for both the building(s) and paved areas. The unsuitable soils shall be removed and disposed of as described above. The A-E designer shall determine and specify on the drawings the depth and limits of unsuitable soils to be removed. For determination and guidance in selecting the limits of removal, the A-E designer shall plot the boring log on the appropriate work cross section(s) or profile(s). To guide the Contractor in his removal operations, the limits and extent of the removals shall be shown by appropriate symbol(s) or notes on the finished profile(s) and cross section(s) in the final contract drawings.

1.10.3 Disposal of Existing Pavements. All pavements removed, including floor slabs, footings and chimneys, shall be broken into pieces measuring not more than 300 mm on any one side. If so approved, the broken pieces may be used as grouted riprap for ditch pavement as required to eliminate erosion. Material not used for this purpose may be placed in a 300 mm layer, uniformly tamped and leveled to present a satisfactory appearance on outfall ditch bottoms and side slopes in outlying areas. When ditch pavement or side slope protection is not required, place material in the disposal area shown on the Location Plan. The A-E designer should visit the project site to determine the location and limits of the disposal area, as described above.

1.10.4 Estimated Sitework Quantities and Unit Price Schedule. A list of estimated sitework quantities and unit price schedule shall be prepared and submitted for each project site. For site development (grading, paving, storm drainage, grassing, erosion control, landscaping, etc.), the list may include a tabulation similar to the following:

Item	Description	Est. Quantity	Unit
1.	Removal of Existing Pavement and Drainage Structures	Job	LS
2.	Unclassified Excavation	10,000	CM
3.	Unclassified Borrow	510	CM
4.	Storm Drainage:		
	(a) 12" standard strength concrete or clay pipe; or 16 gauge, type "D" C.M. pipe; or optional 15" 16 gauge, type "A" C.M. pipe.	220	LM
	(b) 15" class III concrete or clay pipe; or 16 gauge, type "D" C.M. pipe; or optional		

18" 16 gauge, Type "A" C.M. pipe.	120	LM
(c) Inlets, type "A"	4	Ea
(d) Inlets, type "B"	4	Ea
5. Bituminous Pavement	1,800	SM
6. Concrete Pavement (__" thickness)	525	SM
7. Concrete Sidewalk (4" thickness)	320	SM
8. Exterior Concrete Steps	Job	LS
9. Concrete Combination Curb and Gutter	600	LM
10. Concrete Curbing	85	LM
11. Turf - Bermuda Grass Sprigging/Seeding	2.3	HA
12. Nitrogen as Fertilizer	138	Kg
13. Mulching	2.3	HA
14. Seeding Temporary Fall Cover	2.3	HA
15. Solid Sodding	42	SM
16. Painting Parking Lines (3" width)	200	LM
17. Chain Link Fence (type FE-6), 8' high	300	LM
18. Erosion Control Measures	Job	LS

A list, similar to the above, shall normally be prepared to assure that all payment items are included in this portion of the project design. However, depending on the size of the particular project and unless otherwise instructed by the District Project Manager, the A-E will usually be instructed, before preparing final project specifications, to combine the estimated cost of all sitework into a job, lump sum payment item. (Refer to Chapter A-9 for additional guidance.)

1.10.5 Special Instructions for Designing a Large Building Complex, Major Road Network or Airfield Pavements. When a project design consists of: a large complex of buildings, major road network, or airfield pavements, the following additional instructions are also applicable:

a. In addition to general layout by dimensions from existing structures, key points must be referenced to a construction base line (B/L) tied into the installation's plane coordinate system. Unless otherwise specified in paragraph 1.3.1, the plane coordinate system shall be referenced to local datum(s) established for the particular project, using the monuments of the base line and other features such as centerline points of the existing road, etc., for the Contractor to re-establish control points in the field prior to laying out the proposed construction work.

b. The sitework for a large building complex shall show finished grade contours, as covered hereinbefore for general building sites. However, estimated earthwork quantities shall be computed from plotted cross sections for record purposes, in accordance with subparagraph e. below.

c. Unless otherwise instructed, where existing roadway pavement is specified to have overlay pavement, cross section elevations must be taken at station intervals not greater than 10 m along the centerline and also the edges of the pavement to establish the minimum and maximum depth of overlay pavement required and the finished profile grade(s). All "existing" potholes and badly cracked pavement sections shall also be located and indicated on the drawings, including details for patching and repair. Road profiles may be plotted at a scale of 1 m = 400 m horizontal and 1 m = 200 m or 100 m vertical. (The vertical dimension scale will be determined by the complexity of the existing topography.) Other scales may be considered, with prior approval of the Savannah Districts' Site Development Section (EN-GD).

d. Plan and profile drawings shall be required for all "major" road designs, including family housing, recreation areas, and range complexes. The plan view shall include topography taken along the centerline (C/L) of the proposed road and extending to either side a minimum of 15 m beyond the end of the estimated cut or fill slopes. Topography of intersecting drainage swales and ditches must be carried a sufficient distance (not less than 60 m from centerline of road) to show transition to/from the proposed culvert headwall, graded swales or roadside ditches. The scale of drawings for major road designs may be 1 m = 400 m, and must show existing contours on which the new road is to be placed. Finished grade contours will not be required on roadway projects except at road intersections and turnouts, at major buildings, or around major drainage structures. Roadway cross sections mentioned subsequently shall be included in the contract drawings and may serve in lieu of finished grade contours. However, if a roadway under design is of short length, upon EN-GD's approval, the A-E may use finished grade contours in lieu of including finished cross sections in the final contract drawings. In such cases, work cross sections (pencil form) to support calculations of total earthwork quantities and for determining balance points of cut and fill shall be furnished for the District's Project Record File, as specified in paragraph 1.7.4.

e. The preparation of cross section drawings for a large building complex and major road network, whether to be a part of the contract drawings issued to bidders or used as working drawings for the District's Project Record File, shall include the plotted end areas, sum of end areas, quantity of earthwork between full stations or plus stations and the subtotals at the top of each sheet. (Cross section stationing shall be plotted from the

bottom toward the top of the sheet.) Stripping and removal of unsuitable soils shall also be considered and appropriately indicated in the computed volume of excavation. To simplify establishing the limits of unsuitable material(s) to be excavated, the boring logs shall be plotted on either the work cross sections or the C/L profile(s). The final cross section sheet(s) shall give a tabulation of the total embankment, excavation, stripping, and when required, the excavation of unsuitable soils. A suitable shrinkage factor for compaction shall be applied to the embankment quantity of each individual section or to the total fill quantity, depending on whether or not balance points are being considered along the C/L profile to determine if borrow or waste is required. When portions of the stripped material can be processed and reused as topsoil, the final estimated earthwork quantities shall reflect this volume of soil used in the work. The shrinkage factor for swelling the embankment areas (paragraph 1.9.2) shall be carefully selected to be representative of the type and density of the soils anticipated to be encountered, and the degree of compaction to be specified. (In addition, reference paragraph 1.7.4c.)

f. Cross sections for airfield pavements shall be prepared in final form and included in the final contract drawings. Preparation of these cross sections shall be as specified in the preceding paragraphs, with the additional requirement of showing the boring logs located at the appropriate section(s). This will simplify the review of existing soil(s) upon which the pavements will be constructed, and readily determine the acceptability of the site soils and the extent of removal and replacement of unsatisfactory soils, if required.

g. The need for reasonably accurate earthwork quantities cannot be overemphasized. The A-E designer must inspect the site of the work and take into account the type of terrain (woods, swamp, pasture, cultivated) and soils, since all these items will have a bearing on the design engineer's judgment in making assumptions and applying the proper factors in estimating the total quantities of earthwork for the project. (Reference paragraph 1.7.4c.) When earthwork cross sections are furnished for review, the A-E shall also furnish all backup data and describe in sufficient detail on a specially prepared summary sheet separate from the cross sections the procedure used and the assumptions and reasons established in estimating the earthwork quantities. The summary sheet shall show all quantities in cubic yards, including significant data applicable to the particular project, such as:

(1) Stripping of topsoil, roots, etc., (indicate depth and limits).

(2) Removal of organic or other unsuitable soil (indicate depth and limits).

(3) Earthfill (embankments), including the appropriate shrinkage factor applied to embankment earthfill to compensate for compaction.

(4) Allowance for over-building as a result of subsistence of high fills (indicate depth).

(5) Allowance for backfilling of stump holes, if significant.

(6) Usable soil(s) available for earthfill from the general excavations on the project site.

(7) Location of earth borrow area(s), when sufficient material for earthfill is not available from the general excavations on the project site.

h. Gravel areas should not be used around any buildings where the gravel can be used to break items such as windows and globe type light fixtures.

1.9.6 Landscaping.

a. General.

(1) When landscaping is required in the project design, the A-E will make field investigation(s) to determine the location and type of existing plants and trees, verify location of sidewalks, drives and parking areas, overhead and underground utilities, and other information including user requests, deemed necessary for complete design of the project. Specific attention shall be given to emphasizing entrances to buildings, screening of utilities, and erosion control, as required by site characteristics.

(2) The final landscape design shall reflect incorporation of all review comments, user requests and/or recommendations resulting from review of all previous A-E design submittals.

(3) The items included herein for landscaping design will require a complete set of drawings be prepared in accordance with TM 5-803-5, TM 5-830-2, and TM 5-830-4. When available, the Installation's Design Guide(IDG) shall also be used.

(4) Contract specifications shall be developed primarily from District Specifications and CEGS Specifications.

(5) The A-E is reminded to take particular care with the quality of drafting, and design presentation to comply with the standards outlined in Chapter A-10.

b. Specific.

(1) The final Landscape Plan shall contain the following additional information:
(a) Existing plantings (to scale as near as possible).
(b) Key Plan (not to scale).
(c) Detailed Final Cost Estimate shall include Final Landscaping Quantities.
(d) Plant List or Schedule, giving botanical and common names, size, caliper (trees only), manner grown and prepared, and quantity.
(e) Graphic or bar scale.
(f) Irrigation plan (as requested by Installation).

NOTE: Cost of landscaping (excluding grading, seeding, or sodding) shall be limited to that shown in Appendix A, Section 6, of the Specific A-E Instructions.

(2) The following manuals, drawings, and specifications shall be used in preparing Landscape Plans:

(a) The "Installation Design Guide" (IDG) for the military installation where the proposed project is located.

(b) TM 5-803-5, "Installation Design," dated 1 March 1981; TM 5-830-2, "Establishment of Herbaceous Ground Cover;" and TM 5-830-4, "Planting and Establishment of Trees, Shrubs, Ground Covers and Vines."

(c) Districts specifications and CEGS Guide Specification.

(d) Site plans showing "as built" utilities (above and underground), or latest available design drawings furnished by the appropriate user (DEH or BCE).

(e) Floor plans and elevations of both "existing" and proposed buildings on the project site.

(3) For projects having 5 or more buildings, the A-E may:

(a) Prior to beginning concept design, and after detailed review of the requirements outlined above and included in TM 5-803-5, request that the Landscape Architect from Savannah District's Site Development Section (EN-DG) come to the A-E's office for a predesign conference.

(b) Submit a preliminary design containing "complete" tree planting and foundation plan(s) for at least three types of buildings, in accordance with subparagraph 1.10.6b(2) above, and other applicable requirements specified in paragraph 1.6.2.10.

(c) Final landscape design shall include all landscape documents required by the contract and shall reflect incorporation of all previous design review comments and instructions returned to the A-E designer through the Savannah District's Project Manager.

1.10.7 Erosion Control. Erosion Control Plans meeting specific requirements of State law are now required on projects on all military installations. (Reference paragraphs 1.7.1.3 and 1.7.2.7.)

1.11 DISTRICT GUIDE SPECIFICATIONS FOR SITE DEVELOPMENT.

1.11.1 Index of Guide Specifications for Military Construction (Army and Air Force). Internet address for CEGS specifications http://www.hnd.usace.army.mil/techinfo and following list of unique Savannah District guide specifications:

Division 2 - Sitework

District

Section No.	Title
02059	Removal of Building Foundations, Pavements, and Drainage Structures
02547	Bituminous Pavement with Base Course (Modified NC Department of Transportation Specifications) (for less than 1,000 Tons)
02936	Turf - Bermuda Grass Seeding (For Ft. Bragg and Pope AFB, NC only)
02937	Relocating Trees

The A-E shall pull the appropriate CEGS Guide from the CCB disk or the above internet address and request the District Section from the above list from the District Project Engineer.

CHAPTER A-1

SITE DEVELOPMENT

EXHIBITS

A-1-1 STANDARD DETAIL SKETCHES FOR SITE DEVELOPMENT

A-1-2 STORM DRAINAGE DESIGN INSTRUCTIONS FOR ROADWAYS AND BUILT-OVER AREAS

A-1-3 SAMPLE FORMATE-PAVEMENT AND STORM DRAINAGE DESIGN ANALYSES

A-1-4 STORM DRAINAGE, CESAS FORM 1178 (TABLE I)

A-1-5 STORM DRAINAGE, SAS FORM 1154 (TABLE IA)

A-1-6 STORM DRAINAGE, SAS FORM 1155 (TABLE II)

A-1-7 STORM DRAINAGE, SAS FORM 1156 (TABLE III)

A-1-8 STORM DRAINAGE, CESAS FORM 1179 - HYDRAULIC DESIGN DATA FOR CULVERTS

A-1-9 CHECKLIST FOR A-E's REVIEW OF DESIGN SUBMITTALS

CHAPTER A-2

STRUCTURAL

INDEX

2.1 **GENERAL**

2.1.1 Mission and Function
2.1.2 Scope

2.2 **APPLICABLE PUBLICATIONS**
2.2.1 American Association of State Highway and Transportation Officials (AASHTO)
2.2.2 American Concrete Institute (ACI)
2.2.3 American Society for Testing and Materials (ASTM)
2.2.4 American Society of Civil Engineers (ASCE)
2.2.5 American Institute of Steel Construction
2.2.6 Design References
2.2.7 Guide Specifications
2.2.8 Structural Related Guide Specifications

2.3 **PRECONCEPT SUBMITTAL REQUIREMENTS**

2.4 CODE 3 DESIGN REQUIREMENTS

2.5 **CONCEPT/EARLY PRELIMINARY (35 PERCENT) DESIGN SUBMITTAL REQUIREMENTS**

2.5.1 Structural Narrative
2.5.2 Concept/Early Preliminary Design Analysis
2.5.3 Structural System Selection Analysis
2.5.4 Concept Drawings
2.5.5 Outline Specifications

2.6 **PRELIMINARY (OVER THE SHOULDER) (60 PERCENT) SUBMITTAL REQUIREMENTS**

2.7 **PRELIMINARY (60 PERCENT) DESIGN SUBMITTAL REQUIREMENTS**
2.7.1 Preliminary Design Analysis
2.7.2 Preliminary Drawings
2.7.3 Preliminary Specifications

2.8 **FINAL (100 PERCENT) DESIGN SUBMITTAL REQUIREMENTS**
2.8.1 Design Analysis
2.8.2 Drawings
2.8.3 Specifications
2.8.4 Quality Assurance

2.9 **CORRECTED FINAL DESIGN SUBMITTAL REQUIREMENTS**
2.9.1 General

2.9.2 Design Analysis
2.9.3 Drawings

2.9 **ADDITIONS OR MODIFICATIONS TO EXISTING STRUCTURES**
2.10 **ADDITIONS OR MODIFICATIONS TO EXISTING STRUCTURES**
2.10.1 New Work
2.10.2 Inspection Report
2.10.3 Seismic or Wind Upgrade

2.11 **SITE ADAPTS OF GOVERNMENT DESIGNS**
2.11.1 Concept
2.11.2 Final Design

2.12 **GENERAL DESIGN REQUIREMENTS**
2.12.1 Technical Requirements
2.12.2 Design Analysis

2.13 **REQUIREMENTS FOR DESIGN/BUILD RFP PACKAGES**

2.14 **TECHNICAL REQUIREMENTS**
2.14.1 General Structural Requirements
2.14.2 Design Loads
2.14.3 Structural Steel
2.14.4 Steel Joist Construction
2.14.5 Metal Roof Deck and Metal Form Deck
2.14.6 Concrete Design
2.14.7 Masonry
2.14.8 Timber Trusses
2.14.9 Foundation Design
2.14.10 Building Slab on Grade Design
2.14.11 Masonry Wall Considerations
2.14.12 Building Frame Design Considerations
2.14.13 Seismic Design Considerations
2.14.14 Miscellaneous Structures
2.14.15 Fire Walls

CHAPTER 2

STRUCTURAL

2.1 GENERAL.

2.1.1 Mission and Function. The structural engineer is responsible for the investigation, design, and selection of the force resisting and load supporting members and their connections in a structure. Typical examples are foundations, walls, columns, slabs, girders, trusses, beams, diaphragms, and similar members. The investigation, design, and selection requires a knowledge of engineering laws, formulae, and practice; a knowledge of the physical properties of the materials used for such members; and a knowledge of the methods used in their erection.

2.1.2 Scope. This chapter states criteria, requirements, and guidance for structural design. Specific submittal requirements in this chapter supplement the requirements contained elsewhere in other volumes. All required documents, including the drawings and the design analysis, shall be prepared in accordance with applicable instructions. The Exhibits referenced in this chapter are located in Volume III, Chapter 2, STRUCTURAL.

2.2 **APPLICABLE PUBLICATIONS**. The following publications of the issues listed below, but referred to thereafter by basic designation only, form a part of this manual and contain criteria to be used in the structural design. Copies of these publications can be obtained from the Project Manager.

2.2.1 American Association of State Highway and Transportation Officials (AASHTO).

AASHTO HB-16Standard Specifications for Highway Bridges

2.2.2 American Concrete Institute (ACI).

ACI 318/318R Building Code Requirements for Structural Concrete and Commentary

2.2.3 American Society for Testing and Materials (ASTM).

ASTM A 36 Carbon Structural Steel

ASTM A 572 High-Strength Low-Alloy Columbium-Vanadium Structural Steels

2.2.4 American Society of Civil Engineers (ASCE).

ASCE 7 Minimum Design Loads for Buildings and Other Structures

2.2.5 American Institute of Steel Construction (AISC).

ASD Manual of Steel Construction, Allowable Stress Design, Ninth Edition

LRFD Manual of Steel Construction, Load & Resistance Factor Design, First Edition

2.2.6 Design References:

AFM 88-15 Air Force Design Manual, Criteria and Standards for Air Force Construction

AFR 89-1 Design and Construction Management

AEI Architectural and Engineering Instructions, Design Criteria

IBC 2000 International Building Code

UFC 1-200-01 Design: General Building Requirements, 31 July 2002

TI 809-01 Load Assumptions for Buildings

TI 809-04 Seismic Design for Buildings

TI 809-07 Design of Cold-Formed Load Bearing Steel Systems and Masonry Veneer/Steel Stud Systems

TI 809-29 Structural Considerations for Metal Roofing

TI 809-30 Metal Building Systems

TM 5-805-1 Standard Practice for Concrete for Military Structures

TM 5-805-7 Welding Design, Procedures and Inspection

TM 5-809-2 Concrete Structural Design for Buildings

TM 5-809-3 Masonry Structural Design for Buildings

TM 5-809-6 Structural Design Structures Other Than Buildings

TM 5-809-9 Structural Design for Thin-Shell Roof Construction

TM 5-809-11 Design Criteria for Facilities in Areas Subject to Typhoons and Hurricanes

TM 5-809-12 Concrete Floor Slabs on Grade Subject to Heavy Loads

TM 5-818-1 Soils and Geology Procedures for Foundation Design of Buildings and Other Structures (Except Hydraulic Structures)

TM 5-818-6 Grouting Methods and Equipment

EM 1110-1-2101 Working Stresses for Structural Design 4

EM 1110-2-2502 Retaining Walls

EM 1110-2-2906 Design of Pile Structures and Foundations

ER 1110-345-700 Design Analyses

ER 1110-345-720 Specifications

ETL 1110-1-125 Guidance for Fuel Resistant Sealers for Pavements

ETL 1110-2-322 Retaining and Flood Walls

ETL 1110-3-439 Masonry Veneer/Steel Stud Walls (Nonloadbearing Construction)

ETL 1110-3-447 Engineering and Design Engineer of Record and Design Responsibilities

ETL 1110-9-12 Standing Seam Metal Roof Systems

2.2.7 Guide Specifications:

UFGS	TITLE
02456a	Steel H-Piles
02457a	Round Timber Piles
02458a	Prestressed Concrete Piling
02455a	Cast-In-Place Concrete Piles, Steel Casing
02459a	Piling: Composite, Wood and Cast-In-Place Concrete
02454a	Precast Concrete Piling
02465a	Auger-Placed Grout Piles
02466a	Drilled Foundation Caissons (Piers)
03100a	Structural Concrete Formwork
03200a	Concrete Reinforcement
03150a	Expansion Joints, Contraction Joints, and Waterstops
03300	Cast-In-Place Strucutral Concrete
03340a	Roof Decking, Cast-in-Place Low Density Concrete
03414a	Precast Roof Decking
03511a	Gypsum Plank Decking (Contractor's Option)
03410a	Precast/Prestressed Concrete Floor and Roof Units
05090a	Welding, Structural
05091a	Ultrasonic Inspection of Weldments
05092a	Ultrasonic Inspection of Plates
05120a	Structural Steel
05210a	Steel Joists
05300a	Steel Decking

2.2.8 Structural Related Guide Specifications. The following guide specifications are prepared by other disciplines but frequently require structural review and input:

UFGS	TITLE
03330a	Cast-In-Place Architectural Concrete
03413a	Precast Architectural Concrete
04200a	Masonry

05500a Miscellaneous Metal
06100a Rough Carpentry
07132a Bituminous Waterproofing
07110a Bituminous Damp proofing
07413a Metal Siding
08330a Overhead Rolling Doors
08361 Sectional Overhead Doors
13120A Standard Metal Building Systems
13080 Seismic Protection for Miscellaneous Equipment
13121A Metal Building Systems (Minor Requirements)
13210A Elevated Steel Water Tank
14210A Elevators, Electric
14240A Elevators, Hydraulic
14630A Overhead Electric Cranes

2.3 **PRECONCEPT SUBMITTAL REQUIREMENTS**. No submittal requirements.

2.4 **CODE 3 DESIGN REQUIREMENTS. To be furnished with specific instructions to contract or delivery order**

2.5 **CONCEPT/EARLY PRELIMINARY (35 PERCENT) DESIGN SUBMITTAL REQUIREMENTS**. The structural portion of the concept brochure must outline the proposed methods and materials of design and construction for approval. An outline of the required brochure is shown in Exhibit A-2-3. The design shall include the following:

2.5.1 Structural Narrative.

2.5.1.1 General. Use present tense wording for all paragraphs. Provide a general description of the scope of the project and all of the major structures. Give overall building dimensions and a description of the principal features such as wall and roof construction. If the building is irregularly shaped, explain where seismic joints will be placed to create regular shapes or provide a statement that a dynamic analysis of the building will be performed (seismic joints are preferred for most all of the structures we design).

2.5.1.2 Framing System.

2.5.1.2.1 Provide a brief description of the framing system chosen and the reasons why. If a Structural System Selection Analysis (economic justification) was required then this paragraph should summarize the results of that analysis. The analysis will appear later in the outline and shall justify the system selection.

2.5.1.2.2 Provide a brief description of the lateral load resisting system and how these loads will be transmitted to the foundations.

2.5.1.2.3 Foundation. Give a brief description of the anticipated foundations based on similar construction in the area.

2.5.1.2.4 List special design features.

2.5.1.2.5 Fire Resistance Statement. State the required fire resistance criteria for all portions of the structural system and the proposed method of meeting these requirements.

2.5.1.2.6 List structural information needed to complete final design.

2.5.2 Concept/Early Preliminary Design Analysis. The following specific items shall be included.

2.5.2.1 Load Assumptions. State the live loads for which the facility is to be designed. Include roof and floor loads. Calculate the wind loads, lateral earth pressure loads, seismic loads, etc. as applicable.

2.5.2.1.1 Both positive and negative wind pressures shall be calculated with the controlling pressures summarized in tabular form. The following pressures shall be included as a minimum: wind on frame, wind on walls, wind on roof, wind on wall corners, wind on roof ridges, wind on eaves, and wind on roof corners.

2.5.2.1.2 Calculate the basic seismic loadings for the frame or lateral load resisting system and contrast them with the comparable wind loads. Detailed calculations for seismic loads on parts and portions is not required at this submittal level.

2.5.2.2 Working Stresses. Describe the values to be used for the allowable or working stresses of the principal structural materials.

2.5.2.3 Structural Calculations. Furnish calculations for typical roof, floor, and foundation members as applicable for the structural system proposed to be used in addition to the loading calculation required above.

2.5.3 Structural System Selection Analysis. For all projects with a construction value of $500,000 or greater furnish a comparative analysis of at least three competitive structural systems. These structural system alternatives are defined as the consideration of different structural materials and different framing systems supporting the loads imposed on the structure. Different structural systems are not the variations of the same framing scheme (i.e. changing bay widths of a steel frame). A portion of each facility, large enough to be representative of the entire structure, shall be designed in enough detail to provide for an estimate that will be the basis of the structural system selection. The portion of the structure selected for comparing alternate system costs shall include framing for at least one typical bay of the roof, floor, and foundation systems. Additional costs due to nonstructural systems but attributable to a structural alternative shall be included in the comparative cost estimate for that alternative. Determination of these additional costs must be based upon a concept of the complete building configuration, including architectural, mechanical, electrical, and other systems. Hence, the main structural members must be sized to check for compatibility with ceiling, duct, lighting, and all other space demands. The method of providing the required degree of fire resistance shall be determined for each alternative, and the costs included. The submittal shall include the following items:

a. A complete description, with sketches, of each structural system considered.

b. Design calculations supporting the member sizes used for the cost estimate.

c. A comparative cost for each system, clearly showing all costs and quantities used.

d. An analysis of the study results, with justification for the system selected.

2.5.4 Concept Drawings. Furnish sufficient framing plans for roof and floors, as applicable, to indicate layout of principal members. Typical sections should be furnished through roof, floor, and foundation indicating materials and type of construction proposed. These details may be shown on the architectural plates. Furnish a 1:200 scale plan identifying the location of all seismic joints.

2.5.5 Outline Specifications. The Engineer shall review the list of guide specifications in this section and shall list those sections he proposes to use at the end of his concept narrative.

2.6 **PRELIMINARY (OVER THE SHOULDER) (60 PERCENT) SUBMITTAL REQUIREMENTS**. See Volume I for submittal requirements.

2.7 **PRELIMINARY (60 PERCENT) DESIGN SUBMITTAL REQUIREMENTS**. The preliminary design will represent approximately 60 percent of the total structural design effort.

2.7.1 Preliminary Design Analysis. The preliminary design analysis shall include all items in the concept design analysis and any revisions necessitated by comments on the Concept Submittal. The design analysis will be substantially complete for all the major structural features of the primary structure and will include but not be limited to the following:

a. A brief narrative that provides the references, design loads, assumed allowable stresses, and a brief description of the structure to include type of foundation, type of framing, and method of resisting lateral loads.

b. A synopsis of special design criteria or technical requirements provided as a result of site visits or correspondence with the Corps of Engineers Project Managers. Copies of any letters or minutes of meetings which provide structural guidance not otherwise contained in this manual should be included in this section of the design analysis.

c. Complete calculation of seismic and wind loads for final design to include distribution of these loads to the lateral load resisting elements.

d. Design calculations for roof and floor decks, beams, joists, girders, and columns as applicable.

e. Design calculations for horizontal diaphragms and bracing to include shear transfer connections.

f. Design calculations for exterior cladding (masonry, steel, precast concrete) for flexure, shear, and overturning as appropriate.

g. Design calculations for shear walls and bracing.

h. Checking of the design at this stage will not be required. This submittal will not normally include the design of lesser related structures such as utility vaults, pits, tanks, retaining walls, tank hold down pads, etc. The structural design of these structures is the responsibility of the structural engineer even when shown on drawings for other disciplines. The design analysis of these structures is required at final design.

2.7.2 Preliminary Drawings. This submittal will include the following as applicable:

a. Foundation plans, framing plans for each floor, and roof plans for the building. Grid lines on center lines of columns shall be indicated on the plans for buildings framed with columns and beams. In framing plans consisting of repetitive bays, only a typical bay needs to be detailed to indicate the proposed framing.

b. Layout of floor joints in slab on grade. Layout of construction, control, expansion, and seismic joints in foundation, floor, and building framing.

c. Typical sections through foundations, floors, and roof framing for buildings.

d. Plans and sections of structures other than buildings.

e. Additional sections and details as required to illustrate any special items or methods of framing for which approval is sought.

f. General, foundation, and superstructure notes as shown in the Exhibits.

2.7.3 Preliminary Specifications. Not required at this submittal.

2.8 **FINAL (100 PERCENT) DESIGN SUBMITTAL REQUIREMENTS**.

2.8.1 Design Analysis. Furnish all items described above required by the Preliminary Submittal if no Preliminary Submittal is required or any revisions necessitated by comments for the Preliminary Submittal if it was required. Furnish complete checked calculations for all structural members. Incorporate any changes required by comments on Preliminary Review Submittal. Include a completed copy of Exhibit A-3-2, CERTIFICATE FOR DESIGN OF MASONRY WALLS, when masonry walls are part of the design.

2.8.2 Drawings. Furnish complete final plans and details of all structural elements. Prior to this submittal structural drawings shall be coordinated with all other design disciplines. Show on drawings a complete set of general and special notes as shown in the exhibits. The items listed below will always be included on the final drawings if applicable:

a. Roof framing plan and details including details of any opening in the roof.

b. Intermediate floor framing plans and stair details on multiple story structures.

c. Stress or load diagrams of features to be contractor designed (i.e., connector plates on wood trusses are contractor designed based on member stress information shown by the Engineer on the structural drawings).

d. Column schedule, beam schedules, and slab schedules. (Column loads at top of footings will always be tabulated on the drawings.)

e. Foundation plan including any notes relative to special foundation treatment required and cross references to proper specification sections.

f. Foundation sections and details.

g. Layout of expansion, construction, and dummy joints in floor slabs; horizontal and

vertical joints in foundation walls; joints in footings; and layout of control joints in masonry walls.

h. Typical and special sections as required.

i. Details of expansion, construction, and contraction joints in concrete.

j. Layout and detail of exterior entrance pads and steps.

k. Details of any special items.

l. General and special notes as required except that the term "by others" shall not be used.

2.8.3 Specifications. Submit a completed set of final specifications for review.

2.8.4 Quality Assurance. Final drawings and specifications shall be checked by the same checker who checks the final design analysis. Structural drawings shall be coordinated with the other disciplines and the specifications. Dimensions, schedules, sections, and details shall be fully checked. Designers and checkers shall initial the pages of the design analysis and on the drawings. Exhibit A-2-8 is a sample of the quality review checklist that will be used by the District to review final design. The A-E is encouraged to use this or a similar form to review the final checked design documents.

2.9 CORRECTED FINAL DESIGN SUBMITTAL REQUIREMENTS.

2.9.1 General. The corrected final submittal is not to be considered a normal design level and is required only when the final submittal must be revised or corrected due to error or omission.

2.9.2 Design Analysis. Furnish final structural calculations, incorporating any and all changes made during the process of review and redesign. Calculations will be checked and verified by an engineer other than the original designer.

2.9.3 Drawings. Drawings will implement all comments from previous submittals. Verify that all drawings are finalized and verify consistency between the plans and specifications.

2.10 ADDITIONS OR MODIFICATIONS TO EXISTING STRUCTURES.

2.10.1 New Work. When new work is added to an existing structure or an existing structure is modified, the Engineer will be responsible for determining the adequacy of the existing structure for the addition or modification.

2.10.2 Inspection Report. An inspection of the existing structure shall be performed for the purpose of determining the condition and measurements of the areas affected by the new work. The Concept Design shall include a narrative that outlines the results of this inspection to include describing the layout and details of the existing structure, stating the calculated capability of the structure to support the new loads, and describing the strengthening that will be required.

2.10.3 Seismic or Wind Upgrade. Seismic or wind upgrade of the existing structure to meet the latest criteria will not be required unless specifically stated in the Structural Specific

Instructions.

2.11 **SITE ADAPTS OF GOVERNMENT DESIGNS**. Where standard drawings or other drawings are to be site adapted the following applies:

2.11.1 Concept. The concept brochure shall be as previously described with the following clarifications:

a. A selection analysis is not required.

b. Wind and seismic calculations shall be performed to verify that the controlling lateral loads are higher or lower than the original design. Redesign of the structural features to resist the higher loads will be required and the narrative will fully describe those items to be strengthened.

2.11.2 Final Design. Final design shall consist of complete plans, specifications, and design analysis. The specifications shall be the project specifications updated to include the latest revisions to the Federal and Military guide specifications, design codes, and other criteria. The design analysis shall include a narrative explanation of all changes to the original design to accomplish the site adaptation with backup calculations.

2.12 **GENERAL DESIGN REQUIREMENTS.**

2.12.1 Technical Requirements. Design will be accomplished in accordance with the basic criteria provided herein and in Appendix A, Specific Instructions to the A-E.

2.12.2 Design Analysis.

2.12.2.1 The design analysis shall be prepared in accordance with the general requirements contained in Volume I of this manual and the specific requirements in ER 1110-345-700 except that O&M provisions (Part 3) are not required. The structural O&M requirements are satisfied by the General Notes on the drawings.

2.12.2.2 Analysis by computer calculations is encouraged. Listed below are the commercially available programs currently used in the Structural Section. These or other similar programs may be used except that use of a program not listed will necessitate the submission of the following additional information for that program:

a. The name of the program.

b. A description of the program to include a flow chart showing how the program reaches solution. This description must be sufficient to verify the validity of methods, assumptions, theories, and formulas, but does not require source code documentation or other information that would compromise the propriety rights.

c. A benchmark run validating the program that includes both a computer analysis and a hand analysis of a typical or representative problem.

2.12.2.3 District Approved Computer Programs.

a. STRUDL (GT, Boeing, McAuto, etc.).

b. STAAD III (Research Engineers Inc.).

c. Lotus 123.

d. ENERCALC.

e. ADOSS (PCA).

f. DESCON (Omnitech Assoc.).

g. Intergraph Structural Design Software

h. AISC Software (CONXPRT)

2.13 **REQUIREMENTS FOR DESIGN/BUILD RFP PACKAGES: To be furnished with specific instructions for the contract or delivery order.**

2.14 **TECHNICAL DESIGN REQUIREMENTS.**

2.14.1 General Structural Requirements.

2.14.1.1 In addition to performing the design of the structural features, the structural engineer shall be responsible for ensuring that all mechanical and electrical equipment is properly supported and that all architectural features are adequately framed and connected.

2.14.1.2 Where future expansion of buildings or facilities is planned, it is especially important that the provisions made for the later extension be carefully developed and shown on the drawings.

2.14.1.3 Structural details will be shown on the structural plans and not intermixed with architectural plans and details.

2.14.1.4 All structures shall be designed in accordance with IBC 2000 except as modified by UFC 1-200-01. Use a wind velocity per sheet A-2-1 of this section, Category as determined in accordance with ASCE-7-98.

2.14.1.5 The design wind pressures will be shown on an isometric or 2D view of the building on one of the structural plates and shall be accompanied by a table that identifies the component and cladding pressures for each zone. Pressures for arched and gable roof on open sheds shall be similarly shown.

2.14.2 Design Loads. Load assumptions shall be in accordance with TI 809-01 with the following modifications.

2.14.2.1 Wind Loadings. Wind loads shall be in accordance with the IBC 2000 and ASCE 7-98.

2.14.2.1.1 General. The method of resisting wind loads must be described in the design analysis and supported by actual structural calculations.

2.14.2.1.2 Loading. The wind velocities at the various installations will be as indicated on Exhibit A-2-1. Exposure C conditions will be used unless specifically directed otherwise.

2.14.2.1.3 Wind Framing - Roof Plate System and Load-Bearing Walls. See Exhibit A-2-42. If end walls of buildings are less than 33 percent window and door area, and if the building length, between end walls or substantial partitions, is not more than three times the building width, then a stiff roof deck may be considered to act as a diaphragm transferring wind loads to partitions or end walls. Such a system must be detailed to show adequate anchorage between the diaphragm and the end walls. A stiff deck may be considered to be diagonal wood floor or roof sheathing, light gauge steel roof deck welded to supporting members, poured concrete or gypsum, precast concrete plank welded to supporting members with edges joined by welding. Other type decks must have supplementary cross bracing.

2.14.2.1.4 Wind Framing - Bent System. See Exhibit A-2-43. Where the conditions listed in 2.13.2.1.3 above are not met, structural frames must be used. Adequate calculations must be submitted for this system. Adequate bracing in the roof and walls or diaphragm action of wall or roof covering must be used or adequate sections provided to resist loads in bending.

2.14.2.2 Seismic Load Criteria.

2.14.2.2.1 Family Housing. Seismic criteria to be used for family housing shall be set forth in US Army Technical Standards for Family Housing, Part III. This standard refers to HUD Bulletin 4910.1, which states that "...structures shall be designed to withstand the lateral forces provided for in the latest issue of the Uniform Building Code by the International Conference of Building Officials (UBC)."

2.14.2.2.2 Bridges. Seismic criteria to be used for bridges shall be as set forth in the Standard Specification for Highway Bridges, American Association of State Highway and Transportation Officials (AASHTO).

2.14.2.2.3 All Other Structures. Seismic criteria to be used on structures other than family housing and bridges shall be as set forth in IBC 2000.

2.14.2.2.4 The seismic response accelerations for military installations within the Savannah District boundaries are shown on Exhibit A-2-1.

2.14.2.3 Mechanical Loads. Roof systems over mechanical equipment rooms from which equipment or piping will be supported and roofs of HVAC plants, pump stations, etc., shall be designed for the equipment to be supported but not less than 2.9 kN/m2 (60 PSF). Steel beams are the preferred framing members over these areas since they are not as sensitive to hanger attachment locations as are steel joists. Joists may be used over small mechanical rooms if suspended ceiling loads will not produce hanger loads in excess of 25 Kg (50 pounds) per hanger. Joists will not be used in HVAC plants, pump stations, or similar locations.

2.14.2.4 Anti-terrorism/Force Protection

- **When anti-terrorism/force protection systems must be considered, (required by the 1391) Abide by the applicable paragraph depending on the FY for the particular project:**

- **For FY 03 Military Construction Program projects use:**

Anti-terrorism/force protection systems must be included for this project and shall conform to the "Interim Department of Defense Antiterrorism / Force Protection Construction Standards, "dated 16 December 1999. Structures located within the minimum setback distance noted in Appendix AP 2.1.3 of that document must be designed as hardened structures. All other structures must meet the requirements of Appendix AP 2.4.1. Additional guidance may be found in "Department of Defense Interim Antiterrorism/Force Protection Construction Standards - Progressive Collapse Design Guidance", dated 4 April 2000. Manuals are available from U.S. Army Engineer District, Omaha, ATTN: CENWO-ED-ST, 12565 West Center Road, Omaha, NE 68144-3869.)

- **For FY 04 and later Military Construction Program projects use:**

Anti-terrorism/force protection systems must be included for this project and shall conform to the Unified Facilities Criteria (UFC) "DoD Minimum Antiterrorism Standards for Buildings" UFC 4-010-01, dated 31 July 2002 (The following sentence is optional if the above documents are not provided in the RFP: Manuals are available from U.S. Army Engineer District, Omaha, ATTN: CENWO-ED-ST, 12565 West Center Road, Omaha, NE 68144-3869.)

2.14.3 Structural Steel.

2.14.3.1 Structural steel shall be designed in accordance with American Institute of Steel Construction Specification (AISC). Shop connections for structural steel will be welded and generally field connections will be made with high strength bolts, ASTM A 325. ASTM A 307 may be used for anchor bolts. All connections other than AISC Type II connections will be detailed on the final plans.

2.14.3.2 UFGS 05090a WELDING, STRUCTURAL, should only be used with Type 1 and 3 construction as defined by AISC where there is a large amount of welding of a critical nature. UFGS 05120a STRUCTURAL STEEL, covers welding of structural steel for normal welded connections.

2.14.4 Steel Joist Construction: Steel joist construction will be in accordance with the Steel Joist Institute Specifications. Joist will be anchored to steel supports by field welding. Provide steel insert plates in concrete work. Use 600 mm (2-foot) maximum spacing for floor joist. Where top chords are extended, provide required section modulus of extensions on the drawings. Where equipment is hung from joist, include a detail similar to Exhibit A-2-13 on the plans.

2.14.5 Metal Roof Deck and Metal Form Deck. Where metal roof deck and metal form deck are used, show required section modulus and moment of inertia on drawings. All forms shall be galvanized. Metal deck material shall have a minimum thickness of 0.75 mm (22 gauge). Metal form deck shall have a minimum thickness of 0.75 mm (22 gauge). Metal deck shall be checked to ensure a concentrated construction load of 115 kg (250 pounds) on a 300 mm (1 foot), wide strip does not produce a deflection greater than L/240.

2.14.6 Concrete Design: Concrete design shall be in accordance with ACI 318, latest edition, except as indicated below:

a. All edge or spandrel beams shall have continuous reinforcing top and bottom. Use as a minimum two #16 top and bottom. Beams should also have continuous ties at a maximum spacing of 400 mm (16 inches).

b. Straight bars are recommended in lieu of bent bars for beams and slabs. In no case will bent bars be used in slabs less than 150 mm (6 inches) thick.

c. Floor slabs on grade subject to live loads of 4.8 kN/m^2 (100 psf) and under are usually 100 mm (4 inches) thick and reinforced with 152X152X MW13.3XMW13.3, (6 X 6-W2.0 X W2.0) welded wire fabric placed approximately 40 mm (1-1/2 inches) from top of slab. Fiber reinforcing may also be used in accordance with manufacturer's recommendations.

d. The reinforcing of concrete walls, continuous footings and tie and bond beams shall be continuous (lapped in accordance with ACI requirements) and therefore, typical details showing the arrangement of reinforcing at corners and intersections of these members shall be shown on the drawings.

e. All reinforced concrete shall be detailed in accordance with the Manual of Standard Practice for Detailing Reinforced Concrete Structures by the American Concrete Institute (ACI 318-Latest Edition) unless otherwise noted.

f. Grade 60 reinforcing shall be used for all reinforced concrete work due to the limited availability of grade 40 reinforcement.

2.14.7 Masonry.

2.14.7.1 Masonry construction shall be designed in accordance with TM 5-809-3 and IBC 2000. Location and details of bond beams and all reinforcing will be shown on the structural plans and sections and will be coordinated with the Architect. Lintels for all openings in exterior and interior masonry walls, including windows, doors, and mechanical work such as ducts, shall be shown on the drawings. See paragraph 2.13.11 for additional design requirements for masonry walls.

2.14.7.2 Savannah District does not allow certain types of masonry walls to be used in exterior applications because of their tendency to effloresce.

2.14.7.3 Masonry specifications shall be reviewed by the structural engineer and the paragraphs of structural responsibility appropriately edited to include retaining or deleting testing of mortar and prisms. Testing requirements shall be based on the assumptions used for design and unnecessary tests will be deleted. Prism testing is rarely necessary and should normally be deleted from the specifications.

2.14.7.4 For the past few years reinforced masonry has been the source of numerous deficiencies in both design and construction. The structural designer shall thoroughly review IBC 2000 and the appropriate portions of TM 5-809-3 before beginning design. Especially note that minimum seismic reinforcement is required in the walls and partitions of all masonry structures. The structural engineer is responsible for the proper detailing of these walls to include vertical reinforcement, horizontal reinforcement (intermediate bond beams, bond beams at the floor and top course of each wall), dowels, joint reinforcement, additional reinforcement around openings, reinforcement each side of control joints, lintels, and bond beam intersections. Vertical and horizontal reinforcement shall not be required by general

notes alone. Typical sections illustrating all reinforcement requirements shall be provided on the drawings. Wall elevations showing both horizontal and vertical reinforcing patterns for typical walls and typical openings are to be shown on the structural drawings.

2.14.8 Timber Trusses. Timber trusses and trussed joists shall be designed and detailed on the structural drawings. Since connections for the truss members frequently employ proprietary type plates, the connection design shall be specified to be accomplished by the joist/truss fabricator and submitted for design engineer (GA) review. The drawings prepared by the Engineer shall include member sizes and stress diagrams which indicate the maximum member forces for which the connections are to be designed. Support anchorage shall be specified and detailed by the Engineer on the structural drawings. Under certain circumstances, and with the prior approval of the Structural Section, the Engineer may delegate the design of the wood trusses to a truss design fabricator. In this case, the truss detail sheets and framing plan prepared by the Engineer shall number each truss, show its general configuration, and shall list the technical requirements and loading. The truss design fabricator shall then prepare the complete design of the truss and shall submit the design and design calculations to the Engineer for approval as part of the shop drawings as indicated above. As with the connections, this is a (GA) review.

2.14.9 Foundation Design.

2.14.9.1 Concrete. All concrete building foundations should be designated for a minimum specified compressive strength of 20 MPa (3,000 psi) at 28 days except where use of a higher strength can be economically justified.

2.14.9.2 Type of Foundation and Allowable Soil Bearing Value. The type of foundation, allowable bearing value and foundation depth will be furnished by the District Soils Section (EN-GS).

2.14.9.3 Foundation Notes. The attached applicable notes shall appear on the foundation plan drawing as a minimum. (Exhibit A-2-4).

2.14.10 Building Slab on Grade Design.

2.14.10.1 Design. A "K" value for designing slabs subject to vehicular loads will be furnished by the Site Development Section (EN-DGO) for the project involved. "K" shall be 5430MN/m^2/m (200 psi/in) minimum due to use of compacted gravel and fill under the floor slab. Hangar floor slabs will be designed using aircraft pavement criteria.

2.14.10.2 Criteria. The following criteria should be observed:

a. Use the joint details shown on Exhibit A-2-15 and the technical requirements indicated on Exhibit A-2-16.

b. Floor joints should always be shown on the structural drawings and the spacing will vary depending upon whether reinforced or unreinforced design is selected. For guidance see TM 5-809-12 and UFGS 03300a CAST-IN-PLACE STRUCTURAL CONCRETE.

c. Use a vapor barrier under all slabs on grade.

d. Use 100 mm (4 inch) gravel capillary water barrier under all building slabs on grade

when directed by the soil report.

e. Use #30 felt between floor slabs on grade and foundation beams and piers.

f. Slabs on grade shall not bear on grade beams, walls, or piers except where provision is made to reinforce the slab to prevent cracking should soil settlement beneath the slab occur.

g. Slabs on grade should normally be 20 Mpa (3,000 psi) concrete, except that unreinforced slabs should be 27.5 Mpa (4,000 psi) concrete.

h. Slabs on grade subjected to vehicular loading should be 27.5 Mpa (4,000 psi) concrete even if reinforced. This is for durability of the wearing surface as well as for increased flexural strength.

i. Rebars or welded wire fabric (plain or deformed) may be used. Where columns occur, floor control joints should be placed on column centerlines.

j. Slabs on grade with perimeter felt joints and with floor drains, such as in mechanical rooms, will have a rubber joint sealant on top of the felt joint.

k. In washrack areas, joints should be minimized by use of more reinforcement. The joint between slab on grade and foundation should have a rubber joint sealant.

l. Topping over concrete slabs must be avoided where possible. Where it is not possible, it should be a minimum of 50 mm (2 inches) thick and reinforced with 0.1 percent reinforcement in bars or mesh in flat sheets. Fiber reinforcement may also be provided in accordance with manufacturer's instructions.

m. Use of expansive cement and elimination of most joints may be considered where economical. Where used, it should be at the Contractor's option.

2.14.11 Masonry Wall Considerations.

2.14.11.1 For approved wall types, technical requirements, and testing requirements see TM 5-809-3 and IBC 2000.

2.14.11.2 Mortar. Normally, type N or S mortar will be used. Typically, only one type of mortar is used for all wall types on a project.

2.14.11.3 Standard Details. See standard detail sheet (architectural) for details of control joints, bond beams, lintels, joint reinforcing, connection to steel columns, etc., in addition to the details in the structural exhibits.

2.14.11.4 Exterior Walls. Masonry walls should be engineered in accordance with referenced criteria. Normally, only a single row of vertical reinforcing will be used in walls. Horizontal steel will be joint reinforcing supplemented with intermediate bond beams as required. Exterior CMU walls and the cavity in cavity or anchored veneer walls will be filled with grout below grade.

2.14.11.5 Interior Masonry Partitions. Interior partitions must be supported at the top of the wall by adequate means such as angle braces to roof system, etc., where they do not

receive adequate lateral support from cross walls or columns, or where walls are broken by control joints such that horizontal loads cannot be transferred longitudinally. The wall must be designed for a minimum lateral load of 475 N/M^2 (10 psf). Interior partitions which can be exposed to wind forces due to the opening of large doors must be designed as exterior walls. Minimum seismic provisions apply to both interior partitions and to exterior walls.

2.14.11.6 Design Analysis. The design analysis should explain where it was necessary to design interior partitions as exterior walls.

2.14.11.7 Openings in Walls. It will be necessary to reinforce large openings in walls. Where walls span horizontally between columns, the lintel over the opening must be extended to the columns, and a bond beam below the opening must be extended to the columns. Steel girts may be used for this purpose if necessary. Vertical reinforcing in concrete filled cells will be used to take wind loads at large openings or to act as pilasters where heavy lintels or beams bear on the walls.

2.14.11.8 Steel beams which bear on masonry walls should have slip plates and slotted holes at anchor bolts to provide for thermal movement.

2.14.11.9 Control Joints.

2.14.11.9.1 Control joint spacing shall be as required by TM 5-809-3, except that the spacing may increase where intermediate bond beams are used.

2.14.11.9.2 Joints at the normal spacing must be coordinated with the additional joints required:

a. At corners and intersections of exterior walls and partitions where roof framing (steel frame or load bearing) would impose horizontal loads to the top of the wall if the framing was subjected to change of length due to change in temperature. This is aggravated when insulation is placed on the ceiling instead of on top of the deck.

b. At all bond beam breaks.

c. At all large openings [3m (10 feet) or more in width or height].

d. At change in wall thickness or wall heights.

2.14.11.9.3 Reinforcement in bond beams shall be continuous through control joints at all floor and roof levels.

2.14.11.9.4 Brick expansion joints and masonry contraction joints are normally shown in plan and detail on the architectural drawings. Their locations should be approved by the structural engineer. Note that these joints do not have to coincide.

2.14.11.10 Reinforcing. (Also see paragraph 2.13.7.4)

2.14.11.10.1 Bond beams shall be used above and below large openings spanning between vertical elements.

2.14.11.10.2 Bond beams shall be placed at top of all masonry walls. Minimum reinforcing

shall be two #13 in bottom of 100 mm and 200 mm wide bond beams and one #19 in bottom of 150 mm wide CMU bond beams, (two #4 in bottom of 8-inch and 12-inch and one #6 in bottom of 6-inch). In lieu of a reinforced "U" block bond beam, three courses of horizontal joint reinforcement may be used at top of nonloadbearing partitions and exterior curtain walls.

2.14.11.11 Miscellaneous.

2.14.11.11.1 Masonry must be set 20 mm (3/4 inch) minimum clear of all steel columns and 20 mm (3/4 inch) clear from the bottom flange of steel roof beams.

2.14.11.11.2 Lintels will be provided over all masonry openings, and slip joints will be used under lintel bearings when a control joint is located within 600 mm (2 feet-0 inch) of a masonry opening.

2.14.11.11.3 If masonry is used with a rigid frame, the frame drift must be less than the allowable deflection of the masonry wall as defined in TM 5-809-3, paragraph 7-6.

2.14.11.12 Lintel Design. All lintels should be designed in accordance with TM 5-809-3.

2.14.12 Building Frame Design Considerations.

2.14.12.1 Load-Bearing Walls Versus Frame Type Buildings. Some type of building frame usually is required where a building length or length between shear walls is more than three times its width, where long clear spans are required [30 m (100 feet) or more], or where the building one-story height is in excess of 5.5 m (18 feet). A comparative cost estimate should accompany concept plans to show the basis for frame selection.

2.14.12.2 Concrete Building Frames. Normally, it will be most economical to use grade 60 reinforcing due to the higher allowable stress. Lightweight concrete may be used for floor framing but not for columns; 35 MPa (5,000 psi) concrete may be used where economical; 27.5 Mpa, (4,000 psi) concrete is normally used for pan joist floors. Types of concrete floors which have proved economical are flat slab, waffle slab, pan joist and precast concrete joists. Design dead loads should include the additional concrete topping required due to precast joist camber. Reinforcing in pan joist slabs should be bars or mesh in flat sheets. Minimum reinforcing should be 0.18 percent in each direction for mesh, or 0.2 percent for bars in a direction at right angles to joists, but bar spacing must not be greater than 3t. Bars must also be tied with cross bars at 450 mm (18-inch) o.c. maximum. Thickness of pan joist slab shall be 65 mm (2-1/2 inch) minimum. Provide expansion joints through building frame at 90 m (300-foot) o.c. maximum.

2.14.12.3 Steel Building Frames. In general, shop welded, field bolted construction should be used, except that hanger straps supporting cranes or monorails shall be high strength bolted. High strength bolts for field connections may be used where economy or ease of construction dictates. ASTM A 572 steel should be used where strength can be utilized; otherwise, use ASTM A 36. Bar joists should be K series as defined by the Steel Joist Institute. Long-span joists may be used where required by span and load. Use standard joists where possible. The attached steel framing notes (Exhibit A-2-6) and details should be used where applicable. Steel columns must be clear of masonry walls. Where steel members are anchored to masonry walls to provide support, care must be used to provide slotted holes to allow the wall to move relative to the steel. Specify a nondestructive test on 100 percent of all butt-welded beam or column connections. See guide specifications.

Where floor construction is supported by bar joists, the joist spacing should not exceed 600 mm (2 feet) o.c. with a normal steel form system and 76 mm (3-inch) lightweight concrete. Where steel beams are used to support the metal form system, the spacing can be increased up to about 2.75 m (9 feet) o.c. provided the floor slab is thickened and the metal form system is properly designed. A vibration analysis of these type floor systems is required.

2.14.12.4 Pre-engineered buildings may be used where indicated by the directive or as otherwise approved by the Structural Section. If negotiations assumed a custom designed building and a pre-engineered building is later approved for use, then the original design contract is subject to renegotiation for the reduction in architectural and structural effort. The attached notes on Exhibit A-2-7 relating to this type building should be used. It will be necessary to select these from a catalogue to get standard dimensions or standard structural frames. The Contractor will design the building foundation based on the criteria contained in the notes and on the drawings.

2.14.12.5 Basements. Usually, basement floors will be slab-on-grade construction separated from basement walls by #30 felt. Basement walls should have membrane waterproofing on the outside and under the slab with a continuous perforated tile drain around the basement where required by the soils report.

2.14.12.6 Suspended ceilings on the exterior of building over entrances, docks, etc., must be designed for wind loads. Structural steel angles instead of wire hangers are normally used here since uplift can be a problem. Ceilings may be considered as support for metal stud partitions.

2.14.13 Seismic Design Considerations.

2.14.13.1 The basic seismic technical requirements are contained in IBC 2000 as modified by UFC 1-200-01, dated 31 July 2002.

2.14.13.2 The following is a list of exceptions and clarifications to the references:

a. Avoid use of tie rods for bracing. Use structural rolled shapes.

b. Precast concrete, prestressed concrete, and flat slabs do not qualify as components of ductile moment resisting elements.

c. Pre-engineered Metal Buildings. Panels thinner than 0.75 mm (22 gauge) with self-tapping screws are not permitted for diaphragms or shear walls. All roof or wall systems

using siding or roofing as a diaphragm must be tested for in-plane loading for diaphragm or shear wall effects. Test reports and recommendations must be submitted for evaluation and approval. The steel deck system must have the ability to transmit diaphragm loads and is dependent upon the deck strength, stiffness, panel configuration, fastening method and condition of installation. Since approval of tests on these systems is tedious and time consuming, cross-bracing, rigid frame wind bents, or wind columns are the preferred system. Specifications for pre-engineered metal buildings must require submission of load tests on metal panel walls and roof where used as a diaphragm.

d. The allowable drift of walls, in all cases, must be considered before selecting the type of diaphragm. All story drifts must be checked so that they will be compatible with the diaphragm deflection (especially for brittle walls).

e. The criteria for separation of buildings will apply to seismic joints for parts of buildings. Portions of a building with differing dynamic responses will be separated from each other with seismic joints. Analysis of setbacks in plan and/or elevation per IBC 2000 shall be required to preclude use of seismic joints.

f. Connection of diaphragm to vertical-load-carrying precast elements is necessary to transmit the lateral force generated from the weights of the frame and other masses attached thereto to the diaphragm. Also, the response of the supporting element when subjected to earthquake motion must be in resonance with the diaphragm. Therefore, positive anchorage, such as mechanical fasteners, dowels, or welding as appropriate must be provided.

g. Prestressed, precast concrete frames are not permitted to be used as semiductile frames. The capability or performance of semiductile moment resisting frames of prestressed, precast construction is questioned. Based on our knowledge, its use has not been accepted by codes. Therefore, we cannot allow its use without any specific information or design data to confirm its performance and structural adequacy.

h. Buildings with basements or buried structures may be required to be analyzed for the effect of dynamic soil loadings.

2.14.13.3 Seismic vs Wind. When comparing wind and seismic calculations the general perception that wind or seismic governs totally in a particular direction is not valid. Even though wind or seismic governs a particular direction based on the overall magnitude of load in that direction does not mean that the other is ruled out when considering the design of individual elements of the building that are affected by lateral load in that direction. As will be demonstrated below, wind and seismic calculations have, for different systems and elements, different factors applied to the loads on those elements. This greatly complicates a "controlling load determination," and mandates that this determination not be made on the building as a whole, but that each element of the building must be considered separately, (i.e., parts and portions of a building are to be designed individually for the highest load on them). Both seismic and wind loads should be taken to individual elements and then only after placing the proper factors to the loads should the highest load be selected.

2.14.13.3.1 Wind Loads (IBC 2000 and ASCE 7-98).

2.14.13.3.1.1 The minimum factor of safety for overturning or uplift shall be 1.5. Some textbooks and codes require a higher factor of safety and use of higher factors of safety are not discouraged but are left up to the discretion of the individual designer.

2.14.13.3.2 Seismic Loads (IBC 2000 as modified by UFC 1-200-01).

2.14.14 Miscellaneous Structures.

2.14.14.1 Manholes, Pullboxes, Surface Inlets, etc. These structures should be similar to those shown in the attached Exhibits A-2-70, A-2-71, and A-2-72. A minimum 20 MPa (3,000 psi) compressive strength concrete will be used. Verify location of water table with Soils Section (EN-GS) and check for uplift. Precast concrete structures are acceptable and desired where more economical. H-15 wheel loads will be used except for structures in pavement which will be designed for the wheel load for which the pavement was designed.

2.14.14.2 Headwalls and Box Culverts. Minimum 20 MPa (3,000 psi) compressive strength concrete should be used.

2.14.14.3 Transformer Pads, Condenser Pads, and Generator Pads. See attached details (Exhibit A-2-17) for these structures. Concrete should be minimum 20 MPa (3,000 psi) compressive strength.

2.14.14.4 Retaining Walls, Basement Walls. Lateral earth loads on structures should be based on $p = whK$; where p = lateral pressure, w = wet unit weight of earth [20 kN/m^3 (120 psf) minimum, may be higher in some areas], h = depth of structure, and K is a coefficient (use 0.5 for retaining walls, 0.7 for basement walls and box culverts), and verify with Soils Section (EN-GS). Surcharge loads should be included where applicable. Investigation should also be made using 100 percent hydrostatic pressure (where applicable) at one-third overstress (50 percent where drains are used). The working stress method of design is preferred with actual loads on the wall.

2.14.14.5 Monorail Design. Monorail beams shall be designed for maximum bending stress of:

$$f = \frac{3{,}000{,}000}{1d/bt} \text{ but not greater than 69 MPa (10,000 psi).}$$

based on rated capacity of the hoist plus 25 percent impact and full dead loads for vertical loads, and 20 percent of rated capacity + 25 percent impact for horizontal loads. Deflections should be limited to L/800.

Beams shall also be checked for a maximum overload of 2.75 times the rated hoist capacity at 75 percent of the yield stress. An "I" beam, with channel on top, (T) section should be used for all but very short spans. The hangers and system supporting the monorail beam should be designed for the same loads but at normal stresses. Knee braces should be provided where applicable. Field connections should be A325 bolted connections.

2.14.14.6 Traveling Crane Runway Girders. Runway girders will normally be designed by the crane vendor and will be provided based on performance specifications. The following guidelines should be included in these specifications.

2.14.14.6.1 Continuous girders should not be used where significant unequal foundation settlement is likely to occur. Where foundations are other than shale or hard rock, check anticipated differential settlement so that the difference is limited to 0.003 L between

adjacent supports. (Simply supported girders are not ordinarily affected by differential foundation movements.)

2.14.14.6.2 Limit live load deflection at midspan to "L"/1,000 where L is in mm (inches).

2.14.14.6.3 For continuous girders, limit ratio of length of adjacent spans to 2:1.

2.14.14.6.4 Connect ends of simply supported girders in such a manner that will allow the ends to rotate under vertical loading.

2.14.14.6.5 Proprietary hanging systems by the successful bidder are preferred over direct bolted connections.

2.14.14.7 Precast Concrete Panels. Precast concrete panels used as nonloadbearing construction should have connections such that thermal expansion or contraction may occur without damage to the panels. These connections should at least allow movement at one end of the panel. These connections could be in the form of studs welded to embedded steel plates and anchored into an angle with allotted holes in the direction of expected movement. Also, when the panels bear on other members such as steel or concrete, the expansion end of the panels should bear on neoprene pads, steel or some such material that will minimize the frictional resistance to movement. The precast concrete of the shearing areas should be reinforced additionally horizontally and vertically to minimize cracking of these bearing areas. Reference is made to PCI Manual for Structural Design of Architectural Precast Concrete. Seismic connections should be in accordance with IBC 2000.

2.14.14.8 Valve Pits. Valve pit details and schedule of thickness and reinforcing is included on Exhibits A-2-24, A-2-25, A-2-26, and A-2-27 and may be used for design as appropriate. These valve pits were designed using the conservative assumptions shown on Exhibit A-2-27 realizing that we occasionally design valve pits in remote locations without any soils data. The design procedure is on file in the Structural Section and can be adjusted for any specific location.

2.14.15 Fire Walls.

2.14.15.1 In order to meet fire codes, single fire walls (4-hour rating) must be self-supporting rather than depending upon steel or wood building frame for support. The idea being that if the steel or wood frame collapses due to fire, the wall will still survive. What this means is that in these cases, fire walls should be designed to cantilever off the foundation and should not be connected to the building frame in any way unless the frame has a 1-1/2 hour fire rating. Reinforced pilasters, brick or CMU, are probably the best way to do this. The foundation must be able to take these imposed loads. If it is desirable to connect the wall to a building's steel or wood frame, then a double firewall must be provided. The lateral design load for fire walls should be 0.5 kN/m^2 (10 psf), (same as interior partition design) unless a portion of it serves as an exterior wall. Building framing members that have 1-1/2 hour fire rating or more, may bear on fire walls and provide lateral support for them.

2.14.15.2 Walls with less than 4-hour fire rating do not have to be self-supporting. These walls are sometimes called fire partitions.

2.14.15.3 Control joints in fire walls should be well keyed, caulked with rockwool and with

rockwool held in place by mortar (each side). If the fire wall is reinforced, control joints can be 15 m (50-foot) o.c.

CHAPTER A-2

STRUCTURAL

EXHIBITS

A-2-1 Seismic Site Spectral Acceleration and Design Wind Pressure
A-2-2 General Notes
A-2-3 Concept/Early Preliminary Design Brochure Outline
A-2-4 Foundation Notes
A-2-5 Building Slab-on-Grade
A-2-6 Structural Steel Notes
A-2-7 Pre-engineered Building Notes
A-2-8 Structural Section Quality Control Checklist for Review of A-E Final Design
A-2-9 Not Used
A-2-10 Brick Veneer/Steel Stud Wall System
A-2-11 Not Used
A-2-12 Not Used
A-2-13 Joist Strengthening Detail
A-2-14 Not Used
A-2-15 Control Joint Details
A-2-16 Slab-on-Grade Technical Requirements
A-2-17 Engine Generator Set Pad Detail and Section Thru Equipment Pads
A-2-18 Typical Cable Trench Details
A-2-19 Details of Slab Removal and Replacement for New Floor Drain and Plumbing
A-2-20 Typical Joist Details
A-2-21 Chase Partition Bracing
A-2-22 Detail of Supports for Roof Top Curbs Under Mechanical Equipment
A-2-23 Framing for Typical Roof Opening
A-2-24 Typical Valve or Drain Pit Construction
A-2-25 Typical Valve or Drain Pit Construction
A-2-26 Valve or Drain Pit Schedule
A-2-27 Valve or Drain Pit Schedule
A-2-28 Typical Load Bearing Wall Second Floor Details
A-2-29 Basement Waterproofing
A-2-30 Basement Waterproofing Details
A-2-31 Not Used
A-2-32 Not Used
A-2-33 Typical Precast Floor Systems
A-2-34 Not Used
A-2-35 Not Used
A-2-36 Not Used
A-2-37 Isolation Joint Detail in Concrete Slabs at Columns
A-2-38 Typical Footing Details
A-2-39 Typical Steps in Wall Footing at Gravity Plumbing Lines
A-2-40 Continuous Spread Footing with CMU Foundation Wall (Single Wythe CMU Wall)
A-2-41 Continuous Spread Footing with CMU Foundation Wall (Brick-CMU Cavity Wall Shown)
A-2-42 Wind Framing - Roof Plate System
A-2-43 Wind Framing - Bent System
A-2-44 Typical Steel Joist Base Plate Detail

A-2-45 Details of Roof Connection at Rake
A-2-46 Steel Joist Loading Detail
A-2-47 Not Used
A-2-48 Not Used
A-2-49 Typical Detail for All Interior Non-Load Bearing Partitions Not Extending to Bottom of Deck
A-2-50 Wall Ties to Steel Beam
A-2-51 Not Used
A-2-52 Special Control Joint Details
A-2-53 Typical Detail of Interior Partitions
A-2-54 Interior Metal Stud Partition Support Details (for partitions on supported slabs)
A-2-55 Interior Metal Stud Partition Support Details (for partitions on slab-on-grade)
A-2-56 Not Used
A-2-57 Detail of Intersection of Bar Joist and Partition to Underside of Deck
A-2-58 Not Used
A-2-59 Not Used
A-2-60 Not Used
A-2-61 Expansion Connection of Joist for Long Joist Spans – 18m (60') or More
A-2-62 Not Used
A-2-63 Condenser Foundation Details
A-2-64 Standard Concrete Transformer Pad Details
A-2-65 Transformer Pad Detail
A-2-66 Steel Light Pole Base
A-2-67 Electrical Pullbox and Manhole Details (H2O Wheel Load)
A-2-68 Communications Manhole (H2O Wheel Load)
A-2-69 Electrical Handhole Details
A-2-70 Standard Manhole and Surface Inlet Details
A-2-71 Standard Manhole
A-2-72 Pre-Cast Manhole
A-2-73 Standard Surface Inlet (11 metric ton, (25 kips) Wheel Load Traffic Area)
A-2-74 Standard Surface Inlet Detail (4 metric ton, (9 kips) Wheel Loading Traffic Area)
A-2-75 Pre-Cast Surface Inlet (Non-Traffic Area)
A-2-76 Pre-Cast Surface Inlet (Traffic Area)
A-2-77 Precast Surface Inlet Detail (H2O Wheel Load)
A-2-78 Standard Curb Inlet Details (Light Duty)

WIND PRESSURES AND SEISMIC ACCELERATIONS
(Wind based on ASCE 7-98)
(Seismic based on IBC 2000)

Installation	Wind Velocity MPH	(m/s)	Seismic* Ss	S1
Fort Benning, Georgia	90	40	0.16	0.08
Fort Bragg, North Carolina	100	45	0.29	0.13
Charleston Army Depot, South Carolina	125	56	1.61	0.45
Dobbins AFB, Georgia	90	40	0.28	0.12
Fort Fisher AFS, North Carolina	125	56	0.35	0.14
Fort Gordon, Georgia	90	40	0.40	0.14
Fort Gillem, Georgia	90	40	0.24	0.11
Hunter AAF, Georgia	120	54	0.41	0.15
Fort Jackson, South Carolina	90	40	0.59	0.19
Kings Bay Army Terminal, Georgia	120	54	0.18	0.09
Fort McPherson, Georgia	90	40	0.25	0.11
Moody AFB, Georgia	90	40	0.14	0.08
Pope AFB, North Carolina	100	45	0.29	0.13
Robins AFB, Georgia	90	40	0.20	0.10
Seymour Johnson AFB, North Carolina	130	58	0.22	0.10
Fort Stewart, Georgia	120	54	0.31	0.13
Sunny Point Army Terminal, N. C.	130	58	0.35	0.14
Tarheel Army Missile Plant, N. C.	90	40	0.23	0.11

*Maximum Considered Earthquake, Spectral Response Accelerations for 0.2 second (Ss) and 1.0 second (S1). Values shown are for general location of each installation and should be verified for actual project site. See Spectral Response Seismic Design Maps by USGS/BSSC Project 97 (also on USGS Web page, **http://geohazards.cr.usgs.gov/eq/index.shtml**).

EXHIBIT A-2-2

GENERAL NOTES

1. DESIGN LOADS:

ROOF LIVE LOADS:	ROOF	=	1 kN/M^2
FLOOR LIVE LOADS:	SLABS-ON-GRADE	=	7.2 kN/M^2
	STAIRWELLS	=	4.8 kN/M^2
	CORRIDORS	=	4.8 kN/M^2
	CLASSROOMS & STORAGE	=	4.8 kN/M^2
	MECHANICAL, ELECTRICAL, & ATTIC SPACE	=	4.8 kN/M^2
WIND LOADS:	REFERENCE: ASCE 7-95		
	VELOCITY	=	40 M/S
	I	=	1.0
	EXPOSURE	=	C
SEISMIC LOADS:			

1. WHERE A SECTION OR DETAIL IS SHOWN FOR ONE CONDITION, IT SHALL APPLY TO ALL LIKE AND SIMILAR CONDITIONS.

2. THE CONTRACTOR SHALL BE RESPONSIBLE FOR THE DESIGN AND DETAIL OF SIMPLE (SHEAR ONLY) CONNECTIONS NOT SHOWN ON THE DRAWINGS.

3. NO CORE DRILLING WILL BE PERMITTED IN THE FOUNDATION WALLS OR IN THE ELEVATED SLABS. REFER TO THE MECHANICAL, ELECTRICAL, AND PLUMBING PLATES TO LOCATE PENETRATIONS. THE PENETRATION LOCATIONS MUST BE SHOWN IN THE SHOP DRAWING SUBMITTALS.

CONCRETE MASONRY NOTES

1. ALL CMU SHALL BE TWO-CELL TYPE UNITS EXCEPT LINTELS WHICH SHALL BE U-SHAPED UNITS.
2. BOND BEAM UNITS MAY BE U-SHAPED OR TWO-CELL TYPE.
3. ALL CMU SHALL CONFORM TO ASTM C-90 OR EQUIVALENT METRIC STANDARD.
4. ALL CELLS CONTAINING REINFORCING SHALL BE FULL GROUTED.
5. USE TYPE S MORTAR WITH A MINIMUM COMPRESSIVE STRENGTH OF 12.5 MPa AT 28 DAYS.
6. VERTICAL CELLS TO BE FILLED SHALL HAVE VERTICAL ALIGNMENT SUFFICIENT TO MAINTAIN A CLEAR UNOBSTRUCTED CONTINUOUS VERTICAL CELL NOT LESS THAN 50 X 75mm PLAN DIMENSIONS.
7. ALL MASONRY BOND BEAMS, LINTELS, AND VERTICALLY GROUTED CELLS SHALL BE FILLED SOLIDLY WITH 17.3 MPa GROUT.

EXHIBIT A-2-2

8. BOND BEAMS AT CMU WALLS THAT ARE PERPENDICULAR TO EACH OTHER SHALL MEET AT THE SAME ELEVATION AND THE REINFORCING SHALL BE LAPPED AS REQUIRED.
9. ALL CONCRETE MASONRY UNITS SHALL HAVE A GROSS SPECIFIED COMPRESSIVE STRENGTH OF 14 MPa AT 28 DAYS.
10. DOWELS FROM THE ATTIC SLAB SHALL BE PROVIDED. THE SPACING AND SIZE OF THE DOWELS SHALL MATCH THE VERTICAL REINFORCING BARS.
11. THE ASSUMED F_M FOR MASONRY = 9.5 MPa.

CONCRETE NOTES

1. ALL CONCRETE WORK SHALL CONFORM TO ACI 318-89M REVISED1992, BUILDING CODE REQUIREMENTS FOR REINFORCED CONCRETE.
2. CONCRETE STRENGTH = 27.5 MPa AT 28 DAYS FOR CONCRETE MEMBERS INCLUDING FOOTINGS AND TRENCHES.
3. REINFORCING BARS SHALL CONFORM TO ASTM A615M, A184, A184M F_Y = 400 MPa.
4. ALL SPLICES SHALL BE CLASS "B" TENSION LAP SPLICES UNLESS NOTED OTHERWISE.
5. MINIMUM CONCRETE COVER FOR REINFORCING:
   FOOTINGS..... 80mm
   SLABS 40mm

6. VERTICAL FOUNDATION WALL REINFORCING DOWELS SHALL EXTEND INTO THE FOUNDATION WITH HOOKED BARS OF THE SAME SIZE AND SPACING AS THE VERTICAL REINFORCING.
7. SLABS-ON-GRADE SHALL INCLUDE FIBER MESH REINFORCING AS PRESCRIBED IN THE SPECIFICATIONS TO CONTROL SHRINKAGE.
8. DURING PLACEMENT OF THE CONCRETE SLABS, ALL PRECAUTIONARY STEPS MUST BE TAKEN TO AVOID PLASTIC CRACKS DUE TO WEATHER CHANGES. THE CONTRACTOR SHALL COMPUTE THE PROJECTED RATE OF EVAPORATION IN ACCORDANCE WITH ACI 308-92 AND DCAF BULLETIN 96-08 WITHIN 24 HOURS OF PLACEMENT. IF THE PROJECTED EVAPORATION RATE EXCEEDS THE MAXIMUM ALLOWABLE, THEN THE ERECTION OF SUNSHADES, WINDBREAKERS, AND OTHER SUCH MEASURES AS MAY BE REQUIRED MUST BE TAKEN TO MINIMIZE PLASTIC CRACK FORMATION.
9. THE BAR BENDING SCHEDULE FOR THE FOUNDATION MUST BE SUBMITTED FOR APPROVAL. THE BAR BENDING SCHEDULE SHALL CONFORM TO THE REQUIREMENTS OF ACI 315 AND SPECIFICATION SECTION 3307.

ABBREVIATIONS

ACI	= AMERICAN CONCRETE INSTITUTE	No.	= NUMBER
AFF	= ABOVE FINISHED FLOOR	O.C.	= ON CENTER
AISC	= AMERICAN INSTITUTE OF STEEL CONSTRUCTION	OPP.	= OPPOSITE
ASTM	= AMERICAN SOCIETY FOR TESTING	Kg/M^2	= KILOGRAMS PER SQUARE

	MATERIALS		METER
BRG	= BEARING	Pa	= PASCAL – UNIT OF PRESSURE
CMU	= CONCRETE MASONRY UNIT	KPa	= KILOPASCAL
CONC.	= CONCRETE	P.E.J.	= PREMOLDED EXPANSION JOINT
CONT.	= CONTINUOUS	REINF.	= REINFORCED, REINFORCING
C.J.	= CONSTRUCTION JOINT	SIM.	= SIMILAR

ABBREVIATIONS CONTINUED

DIA.	= DIAMETER	SLV	= SHORT LEG VERTICAL
EL.	= ELEVATION	T.O.S.	= TOP OF STEEL
E.W.	= EACH WAY	TYP.	= TYPICAL
FIN.	= FINISHED	U.N.O.	= UNLESS NOTED OTHERWISE
HORIZ.	= HORIZONTAL, HORIZONTALLY	VERT.	= VERTICAL
IN^3	= INCHES CUBED	w/	= WITH
IN^4	= INCHES TO THE FOURTH POWER	x	= BY
LLV	= LONG LEG VERTICAL	W.P.	= WORK POINT
MAX.	= MAXIMUM	L	= ANGLE
MIN.	= MINIMUM		

CONCEPT/EARLY PRELIMINARY DESIGN BROCHURE OUTLINE

1. Structural Narrative.

   a. General.

   b. Framing System.

   c. Foundation.

   d. Special Design Features.

   e. Fire Resistance Statement.

   f. List structural information needed to complete final design.

2. Design Analysis.

   a. Load Assumptions:

      (1) Dead loads will be loads actually calculated.

      (2) Live loads:

         (a) Roof - - - - - - - - - - - - - - - _____.
         (b) Floor - - - - - - - - - - - - - - _____.

      (3) Wind Load:
         Velocity = _____m/s
         Exposure = ____.
         Importance Factor = _____.

      (4) Crane Loads and Coverage Requirements:

      (5) Seismic Forces:

   b. Working Stresses.

      (1) Concrete - 28-day ultimate compressive strength.

      (2) Reinforcing - - - - - - - - - - - - - - - - - -

      (3) Structural steel - - - - - - - - - - - - - - -

      (4) Other as appropriate.

   c. Calculations: Nominal calculations are required as described in the "Technical Design

Manual."

3. Structural System Selection Analysis.

4. Drawings.

5. Outline Specifications.

FOUNDATION NOTES

1. REFERENCE ELEVATION 100M IS THE ASSUMED FIRST FLOOR FINISHED ELEVATION WITHIN S PLATES. SEE PLATE _____ FOR ACTUAL FIRST FLOOR FINISHED ELEVATION.

2. CONSTRUCTION JOINTS IN CONTINUOUS FOOTINGS ARE TO BE FORMED VERTICALLY WITH MINIMUM 550mm LAPS IN CONTINUOUS REINFORCING UNLESS NOTED OTHERWISE.

3. PLACE VAPOR BARRIER AND 100mm CAPILLARY WATER BARRIER UNDER ALL SLABS-ON-GRADE (TYPICAL).

4. CONCRETE FLOOR SLAB-ON-GRADE MAY BE PLACED IN EITHER A CHECKERBOARD PATTERN OR IN LANES. SPACING OF JOINTS SHALL BE AS SHOWN ON THE FOUNDATION PLAN. IN EITHER CASE, PRE-FORMED JOINTS ARE REQUIRED.

5. ALL FLOOR ISOLATION JOINTS SHALL BE No. 30 FELT.

6. FILL ALL CMU CAVITIES BELOW GRADE WITH GROUT.

7. THE ALLOWABLE SOIL BEARING CAPACITY IS 120 KN/M^2.

BUILDING SLAB ON GRADE

1. Concrete floor slab-on-grade may be placed in either checkerboard pattern or in lanes. Spacing of joints shall be as shown on the foundation plan. If checkerboard pattern is used, all joints shall be construction joints. If lane placement is used, construction joints shall be used for the joints between lanes, while weakened plane joints shall be used down each lane. The reinforcing in the slab shall be _____.

2. At the option of the Contractor the reinforcing in the slab may be eliminated but the strength of concrete must be increased to 27.5 MPa, (4,000 psi). Additional control joints must be installed so that the maximum spacing between any two control joints is less than 24 times the thickness of the slab. (Edit out note #2 in slabs subject to high concentrated loads such as from forklifts.)

STRUCTURAL STEEL NOTES

1. ALL STRUCTURAL STEEL WORK SHALL CONFORM TO THE AMERICAN INSTITUTE OF STEEL CONSTRUCTION (AISC) SPECIFICATIONS FOR DESIGN, FABRICATION, AND ERECTION OF STRUCTURAL STEEL FOR BUILDINGS, NINTH EDITION, HEREINAFTER REFERRED TO AS AISC-9. THE SIZES OF STRUCTURAL MEMBERS SHALL BE GOVERNED BY ASTM A6/M.

2. CONNECTIONS - GENERAL:

3. ALL CONNECTIONS NOT DETAILED OR OTHERWISE NOTED SHALL BE DESIGNED AS AISC TYPE 2 BOLTED CONNECTIONS DESIGNED FOR THE FULL LOAD CAPACITY OF THE CONNECTING MEMBERS.

4. THE DESIGN AND DETAILING OF ALL CONNECTIONS SHALL CONFORM TO THE AISC SPECIFICATION CONTAINED IN AISC-9.

5. MATERIAL SPECIFICATION FOR ROLLED SECTIONS, PLATES, AND FLAT BAR STRUCTURAL STEEL SHALL CONFORM TO ASTM A 572/A 572M (GRADE 50), UNLESS NOTED OTHERWISE. TUBULAR STEEL SECTIONS SHALL CONFORM TO ASTM A500 (GRADE B).

6. MINIMUM WELD SIZE FOR STRUCTURAL STEEL CONNECTIONS IS 5mm FILLET, UNLESS NOTED OTHERWISE.

7. STEEL ROOF DECK TO BE MINIMUM DIMENSION OF 38mm DEEP AND 0.78mm THICK (22 GAGE). THE DIMENSIONS SHOWN IN THE DRAWINGS FOR STRUCTURAL STEEL BEAMS, COLUMNS, PLATES, RODS, METAL DECK, AND SCREWS ARE NOMINAL DIMENSIONS.

8. THIS STRUCTURE IS CONSIDERED A NON-SELF-SUPPORTING BRACED FRAME. THE CONTRACTOR SHALL PROVIDE ADEQUATE TEMPORARY SUPPORTS UNTIL ALL PERMANENT BRACING AND FLOOR SLABS ARE IN PLACE.

LIGHT GAGE TRUSS AND FRAMING NOTES

1. ROOF LAYOUT AND COMPONENTS SHOWN ON THE DRAWINGS ARE FOR GENERAL CONFIGURATION ONLY. THE CONTRACTOR SHALL BE RESPONSIBLE FOR ALL DIMENSIONS, ELEVATIONS CONNECTION DETAILS, QUANTITIES, ETC. NECESSARY FOR THE COMPLETE DESIGN, FABRICATION, AND ERECTION OF THE METAL ROOF FRAMING SYSTEM. THE CONTRACTOR SHALL COORDINATE THE DESIGN WITH THE ARCHITECTURAL PLANS, ELEVATIONS, AND DETAILS.

2. LIGHT GAGE TRUSS AND FRAMING MEMBERS SHALL BE DESIGNED IN ACCORDANCE WITH THE AMERICAN IRON AND STEEL INSTITUTE (AISI)

SPECIFICATION FOR THE DESIGN OF COLD-FORMED STEEL STRUCTURAL MEMBERS.

3. ALL CALCULATIONS AND DRAWINGS USED IN THIS DESIGN MUST BE SIGNED AND STAMPED BY A PROFESSIONAL ENGINEER REGISTERED IN THE STATE OF GEORGIA AND SUBMITTED TO THE GOVERNMENT FOR APPROVAL. IN ADDITION TO THE CALCULATIONS, THIS SUBMITTAL SHALL INCLUDE DETAILS OF CONNECTIONS, ERECTION PLAN, LAYOUT, OUTRIGGERS, HEADERS, BRIDGING, AND BOTH TEMPORARY AND PERMANENT BRACING.

4. THE CONTRACTOR SHALL SUBMIT COMPLETE PRODUCT CATALOGS FROM THE TRUSS MANUFACTURER FOR REVIEW PRIOR TO FABRICATION. THE CATALOGS SHALL INDICATE QUALIFICATIONS, MATERIAL SPECIFICATIONS, DESIGN REFERENCES, ETC.

5. ALL COLD-FORMED STEEL MEMBERS, THEIR COMPONENTS, AND CONNECTION MATERIAL SHALL BE HOT-DIPPED GALVANIZED.

6. ALL TOP CHORD MEMBERS SHALL HAVE A MINIMUM THICKNESS OF 1.5mm.

PRE-ENGINEERED BUILDING NOTES:

Pre-engineered metal buildings shall be procured using Guide Specification UFGS-13120a, STANDARD METAL BUILDING SYSTEMS or UFGS-13121a, SPECIAL PURPOSE METAL BUILDING SYSTEMS as appropriate. The structural drawings shall include a foundation plan which indicates an estimate of the foundation requirements for a typical pre-engineered building that will meet the project requirements. The foundation plan shall be consistent with the requirements of the Government-furnished foundation report. This plan will be supported by notes that clearly define any additional requirements required by the COE. As a minimum, the following notes will be included:

1. Building shall be a pre-engineered building as specified in Section UFGS-13121a, SPECIAL PURPOSE METAL BUILDING SYSTEMS. The building shall be a manufacturer's standard prefabricated metal structure of the approximate inside area shown, except as noted. Rigid frames shall be spaced at center to center, but overall dimensions and construction details may vary to suit manufacturer's standard design.

2. The building shall be designed and fabricated according to AISC and AISI latest specifications. The dimensional tolerances outlined in the AWS code under workmanship and the tolerances applicable to roll form steel under the AISC "Standard Mill Practice" section shall be required in the fabrication of the steel building frames.

3. A complete design analysis showing all calculations for the rigid frames, girts, and purlins, and a layout of anchor bolts and other embedded items shall be submitted for approval with the shop drawings. Shop drawings shall include details of all main members, typical connections (showing bolt holes and welds), and erection drawings.

4. The building shall be designed to support all mechanical equipment including heaters, sprinklers, exhaust systems, and all other such devices. Additional girts or purlins shall be placed in convenient locations for attachment of all mechanical equipment.

5. Wind loads, live loads and load combinations shall be in accordance with TI 809-01, "Structural Design Criteria Loads."

6. Cross bracing shall be used to take lateral loads.

7. The foundations shown are estimates for the building type shown on the drawings and are to be used as a guide for the building supplied. The Contractor shall design the foundations for the loads shown and the building supplied.

8. The Contractor shall use in his design the basic criteria shown by this drawing, such as slab thickness, control joints, capillary water barrier, vapor barrier, design loads, and minimum depth of footing.

9. Footings shall be sized for an allowable soil bearing value of SF. This value is based on a minimum footing width of feet and a minimum depth of feet to the base of the footing measured from finish floor or finish grade elevation, whichever is lower.

10. Foundation design shall be performed by a Registered Professional Engineer and shall be submitted <u>for approval</u> with and as part of the shop drawings.

STRUCTURAL SECTION
QUALITY CONTROL CHECKLIST

FOR REVIEW OF A-E AND IN-HOUSE FINAL DESIGNS

Project Title:	**Date:**
Designed by:	**Checked by:**

GENERAL	
1. Before beginning the review, check to see that you have a complete package, check A-E Standard Procedures manual and the Specific Instructions to see if everything required was furnished. If anything is missing, see the Work Load Manager before proceeding.	☐
2. Before beginning the review, scan the directive, 1391, instructions, prior review comments, and correspondence.	☐
3. After beginning the review, if it appears that the submittal is unsatisfactory, do not proceed. Notify the Work Load Manager.	☐
SPECIFICATION CHECK	
4. Verify that the required sections of the specifications are in the job by comparing the specification index to the plans.	☐
5. Verify that the specifications have been properly edited for the project by reviewing the marked-up sections.	☐
6. Verify that the appropriate review level is indicated for all submittals.	☐
7. Check UFGS-04200a, MASONRY structural items to ensure specification is coordinated with the design. Especially check the testing and/or reinforcing requirements to verify that they are appropriate.	☐
8. Cross check other section's specifications to ensure that any included structural information is correct, i.e., CEGS-06100, ROUGH CARPENTRY needs to be checked if stress rated lumber or wood trusses are used, CEGS-13120, STANDARD METAL BUILDING SYSTEMS for pre-engineered structures, CEGS-13080, SEISMIC PROTECTION FOR MECHANICAL, ELECTRICAL EQUIPMENT for seismic, etc.	☐
DESIGN CHECK	
9. Verify that the design analysis has been signed by both the designer and the checker.	☐
10. Verify that the live loads are in accordance with criteria, particularly over	☐

mechanical rooms.	
11. Verify that the wind loads are correctly computed and applied.	☐
12. Verify that the seismic loads are correctly calculated and applied.	☐
13. Verify the appropriateness of the seismic design assumptions and details such as building separation, etc.	☐
14. Verify the design of the major structural elements, i.e. columns, girders, beams, walls, etc., by spot checking the design of at least one member in each category. Investigate additional members depending upon the results of the initial spot check.	☐
15. Verify the design of the lateral load resisting system from the roof diaphragm to the foundation.	☐
16. Verify that the assumptions used in the foundation analysis are consistent with the foundation report.	☐
17. Verify the adequacy of the foundation design by spot checking the design of a least one type of each foundation element used.	☐
18. If computer programs are used, verify that the necessary backup material has been provided and the assumptions within the backup material are appropriate.	☐
DRAWING CHECK	
19. General Notes:	
a) Verify that ALL design loads are indicated, i.e., live, wind, seismic, crane, etc.	☐
b) Verify that the strength of materials used is specified, i.e., A36 steel, 3,000 psi (20,684 kPa) concrete, Grade 60 reinforcing, f'm 1,350 psi (9307 kPa) compressive strength masonry.	☐
c) Verify that the type of mortar to be used for masonry walls is specified and matches the specifications.	☐
d) Verify that concrete reinforcing requirements such as grade of reinforcing and splice lengths are given (i.e., Grade 60 and 40 bar diameters, respectively).	☐
e) Verify that slab-on-grade thickness and reinforcing requirements are given.	☐
f) Verify that slab-on-grade notes similar to those shown on Exhibit A-2-5 of the Standard Procedures Manual are provided.	☐
g) Verify notes are provided for attachment of metal deck diaphragms to supporting members.	☐

h) Verify that notes are provided for details on any design element not otherwise shown on the drawings.	☐
20. **Metal Building Notes:** Verify that notes similar to those shown on exhibit A-2-7 are used. Also ensure that the same design philosophy indicated on the notes is used in the design.	☐
21. Foundation Notes:	
a) Verify that the allowable soil bearing value and depth required to develop this value are shown.	☐
b) Verify that any other soil design data for designing retaining structures is shown.	☐
c) Verify that appropriate bracing or shoring notes are provided.	☐
d) Verify that any special foundation conditions or requirements are described in the notes.	☐
22. Superstructure Notes:	
a) Verify that the strength of all materials used is indicated here or in the general notes.	☐
b) Verify that the appropriate type of connections is specified, i.e., type/grade of bolts, welds with electrode types, minimum size of fillet welds where not indicated.	☐
c) Verify that the minimum S, I, and weld requirements are given for all metal decks to include rib type (narrow, intermediate, or wide).	☐
d) Verify that a note is added prohibiting the application of loads greater than 50 pounds (22.7 kg) to steel joists without the use of the joist strengthening detail.	☐
e) Verify that an appropriate amount of draw is indicated for all X-bracing.	☐
23. Verify that all depressed or raised slabs are indicated.	☐
24. Verify that proper sizes are indicated on the drawings for structural elements by a spot check comparison of member sizes shown in the calculations and on the drawings. Include at least one type of each structural member in the spot check.	☐
25. Verify that the drawing notes do not conflict with the specifications.	☐
26. Verify that the slab elevations are shown and agree with architectural and site	☐

plans.	
27. Verify that top-of-steel, top-of-wall bearing, etc. elevations are clearly indicated.	☐
28. Verify that sufficient sections are cut on the plans to indicate clearly the details of construction. Verify that section cuts are properly oriented and properly referenced. Spot-check as required.	☐
29. Verify by scanning all sections and details that no criteria violations are present, i.e., slabs resting on footings, etc.	☐
30. Check slab-on-grade jointing to verify compliance with criteria.	☐
31. Verify that stress diagrams are provided for all trusses.	☐
32. Verify that waterproofing is properly shown where required by the soils report.	☐
33. Verify that Plate S-1 has been initialed by both the designer and checker.	☐
34. Verify that appropriate details and notes are provided to indicate CMU reinforcing, thickness, and lintel requirements. Interior walls must be designed to span horizontal or vertical under a 10 psf (48.8 kg/m2) lateral load. Verify that vertical spanning walls are properly supported at the top.	☐
35. Verify that minimum seismic reinforcement is provided in masonry walls if required. Verify that cavity walls are properly designed and have the appropriate reinforcement, i.e., bond beams shown, joint reinforcing 3/16 diameter for seismic walls, etc.	☐
36. Verify that masonry walls are properly jointed and that reinforcement is not continuous through joints except at floor and roof levels. Locations to be shown on the "S" plates and "A" plates with appropriate details.	☐
37. Verify that moment connections are either detailed or that the plans indicate the moment for which the joint is to be designed.	☐
38. Determine if the following items are required and delete them from the specifications as appropriate: capillary water barrier, floor hardener, waterproofing, floor slab reinforcing (increase joint spacing and use 4,000 psi (27,579 kPa) concrete if omitted), flexural strength concrete (pavement only).	☐
39. Verify that a roof slope greater than 1/4" (6 mm — Army) and 1/4" (6 mm — Air Force) is provided.	☐
40. Verify that the minimum depth of the footings agrees with the soils report.	☐
41. Verify that the structural details of vaults, arms rooms and secure areas meet criteria requirements.	☐

42. Verify that perimeter insulation is shown along exterior walls under slabs-on-grade for all air-conditioned spaces. It should be specified in section UFGS-03300a, *CONCRETE FOR BUILDING CONSTRUCTION* or CEGS-03300A, *CONCRETE FOR BUILDING CONSTRUCTION* (Abridged) and shown on all "S" plate and "A" plate wall sections.	☐
43. Verify all cells of CMU walls below grade are filled with grout.	☐
44. Verify that drawings clearly indicate which buildings, by name, are to be constructed using specification UFGS-13120a, *STANDARD METAL BUILDING SYSTEMS* or UFGS-13121a, *SPECIAL PURPOSE METAL BUILDING SYSTEMS*.	☐
45. Verify coordination of mechanical and electrical equipment for support details on the "S" plates.	☐
46. Check for details when pipes run under or through exterior foundation walls.	☐

BRICK VENEER/STEEL STUD WALL SYSTEM

1. This is a questionable wall system that has received considerable criticism. Studies and laboratory tests have not conclusively shown that the present methods of design and construction of this wall system will produce a trouble free, watertight wall system throughout the design life of the facility. Accordingly, it is approved for use in Savannah District only if designed and constructed in accordance with the criteria contained herein.

2. Applicability:

Non-loadbearing curtain wall system - approved all seismic zones.

Load-bearing system - approved for Zone 1 only.

EXCEPTION: System is not approved in barracks or schools where "soldier proofing" of walls is required.

3. Wall system shall be designed for the following load conditions:

a. Design the metal studs for full design wind load, limiting the maximum deflection to L/800.

b. Design the stud system for full design wind load, distributing no load to the uncracked brick veneer. A one-third increase in the allowable stresses is permitted.

4. Metal studs shall be 18 gage, or thicker, to prevent "thread stripping" of screws during installation. Studs shall be hot-dipped galvanized. Coating shall be G-60, ASTM A-525, except for coastal regions the coating shall be G-90.

5. Wire ties shall be similar to Holtmann and Barnard or Dur O Wall brans made of adjustable 9 gauge, minimum, corrosion resistant wire. Each tie shall be attached to the metal stud with at least 2 stainless steel or cadmium screws. Use EPDM synthetic rubber washers between the connector plates and the waterproof covering of the gypsum sheathing. After installing the connectors daub a water resistant coating of asphalt material over the projecting screw points. Tie spacings should not exceed 18 inches horizontally and vertically supporting a veneer area of no more than two square feet. <u>Do not use corrugated metal ties</u>.

6. The gypsum sheathing on the outside of the metal studs should be protected from moisture by spray-on waterproofing from top to bottom of wall.

7. Provide soft horizontal joints at floor levels in the masonry as needed to avoid cracking of the brick if building movement occurs.

8. Provide vertical expansion joints in the brick at short intervals to prevent damage from brick expansion due to thermal or moisture effects.

9. The air space between the back of brick and the exterior face or rigid sheathing must be a minimum of one inch. Keep cavity clean of mortar droppings and other foreign materials. Insulation shall not be used in cavity.

10. Flashing and weepholes - Provide flashing for brick veneer at horizontal surfaces, shelf angles, all openings and bottom of wall. To be most effective, flashing should extend through brick to the outer face of wall and turn down to form a drip lip. Weepholes should be located in the head joints immediately above all flashing and spaced no more than 24 inches o.c.

11. Design and detail back-up framing (metal stud) connections and anchors as though back-up system carries the full design wind load. Attachment detail for top stud runner to floors and beams should be detailed to accommodate beam deflections, concrete creep and shrinkage, etc., without axially loading the stud wall.

12. Provide gypsum board on both sides of metal studs; however, disregard any potential contribution of gypsum board in the strength and stiffness of the metal stud back-up system. Provide horizontal bracing to prevent lateral buckling of studs.

13. Studs at openings for windows, doors, etc., should be designed for tributary loaded areas. In this case double studs and/or increased sizes may be required.

14. Brick mortar shall be Type S portland cement-lime-sand, in accordance with ASTM C-270. Masonry cement, Types N, NA or SA lime shall not be used.

15. Brick shall be grade SW, ASTM C-218. Used brick are not permitted.

16. Metal studs shall not be used for parapet walls.

17. Shelf angles should be ASTM A-36 structural steel. The total deflection of both angle and building support member shall not exceed L/800, or 0.3 inches and rotations shall be exceed 1/18 inch. Shelf angles shall be attached directly to structural frame members. Do not attach and support shelf angles by metal studs. Shelf angles shall not be one continuous member but should be discontinued at intervals to allow thermal expansion and contraction to occur.

18. Sealants shall be a good grade, polysulfide, polyurethane, butyl or silicone rubber. Oil based caulks shall not be used.

19. Good workmanship is particularly essential in the construction of high performance as/by wall system. Therefore, contract plans and specifications shall clearly describe the above requirements. Also, adequate inspection is required to ensure that all work complies with the above-described criteria.

NOTE: Joists shown on the structural drawings are designed for a uniform load that includes the Dead, Live, and Mechanical loads. They are not designed for concentrated hanger loads greater than 50 pounds that may be applied between panel points. Joists shall be strengthened as shown below when hanger loads are applied at other than panel points. No loads shall be suspended from the bridging.

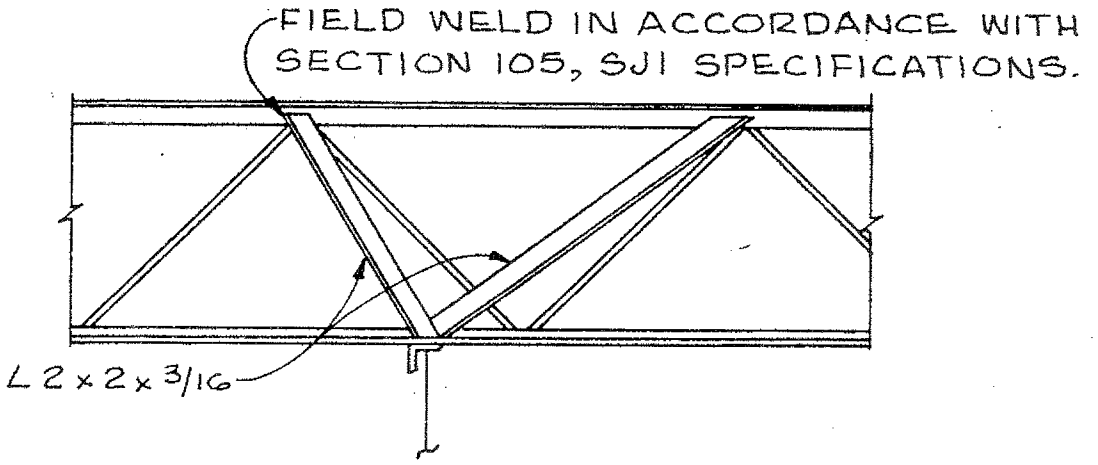

TYPICAL JOIST REINFORCEMENT FOR HANGER LOADS GREATER THAN 50 LBS. AT OTHER THAN PANEL POINTS

JOIST STRENGTHENING DETAIL

EXHIBIT A-2-13

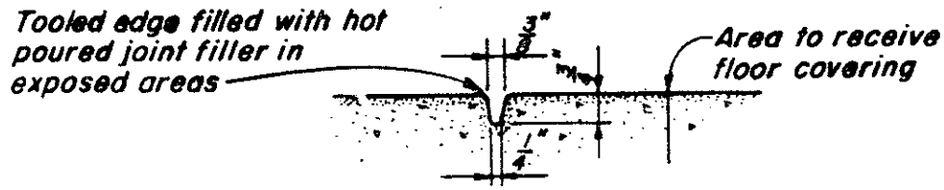

TOOLED EDGE DETAIL

NOT TO SCALE

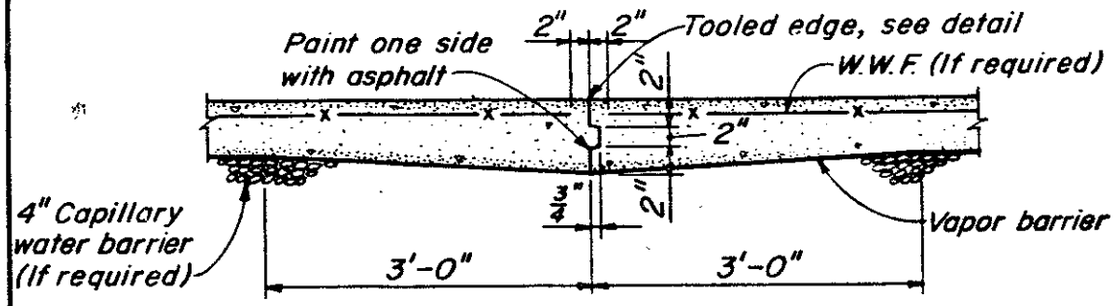

CONSTRUCTION JOINT DETAILS

SCALE : 3/4" = 1'-0"

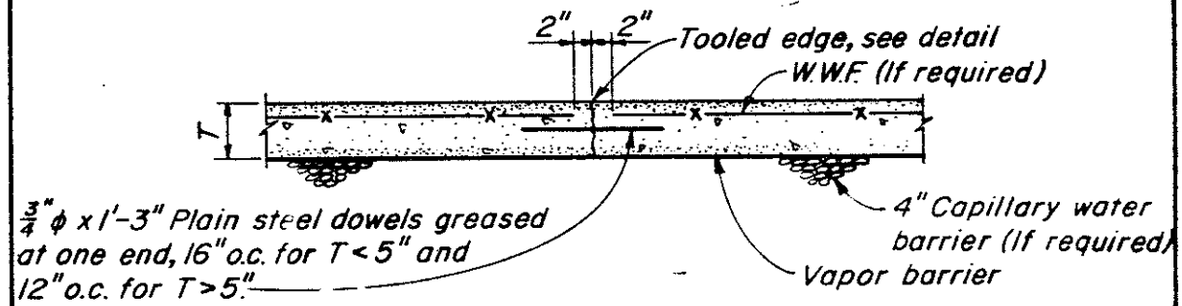

OPTIONAL CONSTRUCTION JOINT DETAILS

SCALE : 3/4" = 1'-0"

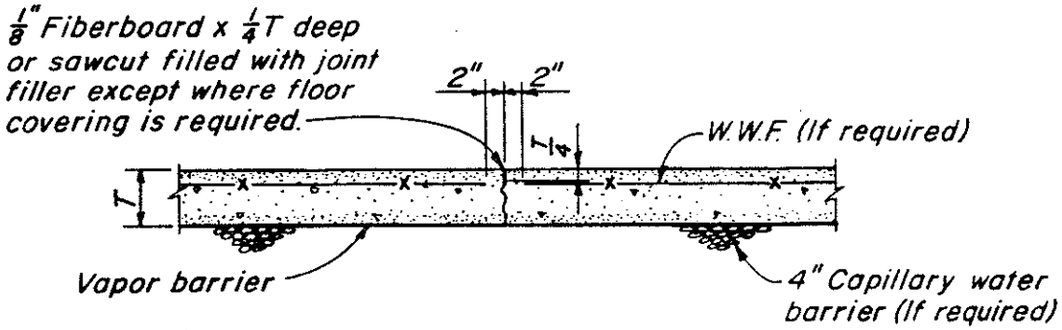

CONTRACTION JOINT DETAILS

SCALE : 3/4" = 1'-0"

NOTES:

1. This detail was developed to be in accordance with TM5-809-2 and Concrete Spec. Section.
2. For concrete floor slabs on grade subjected to heavy loads see TM5-809-12.

CONTROL JOINT DETAILS

EXHIBIT A-2-15

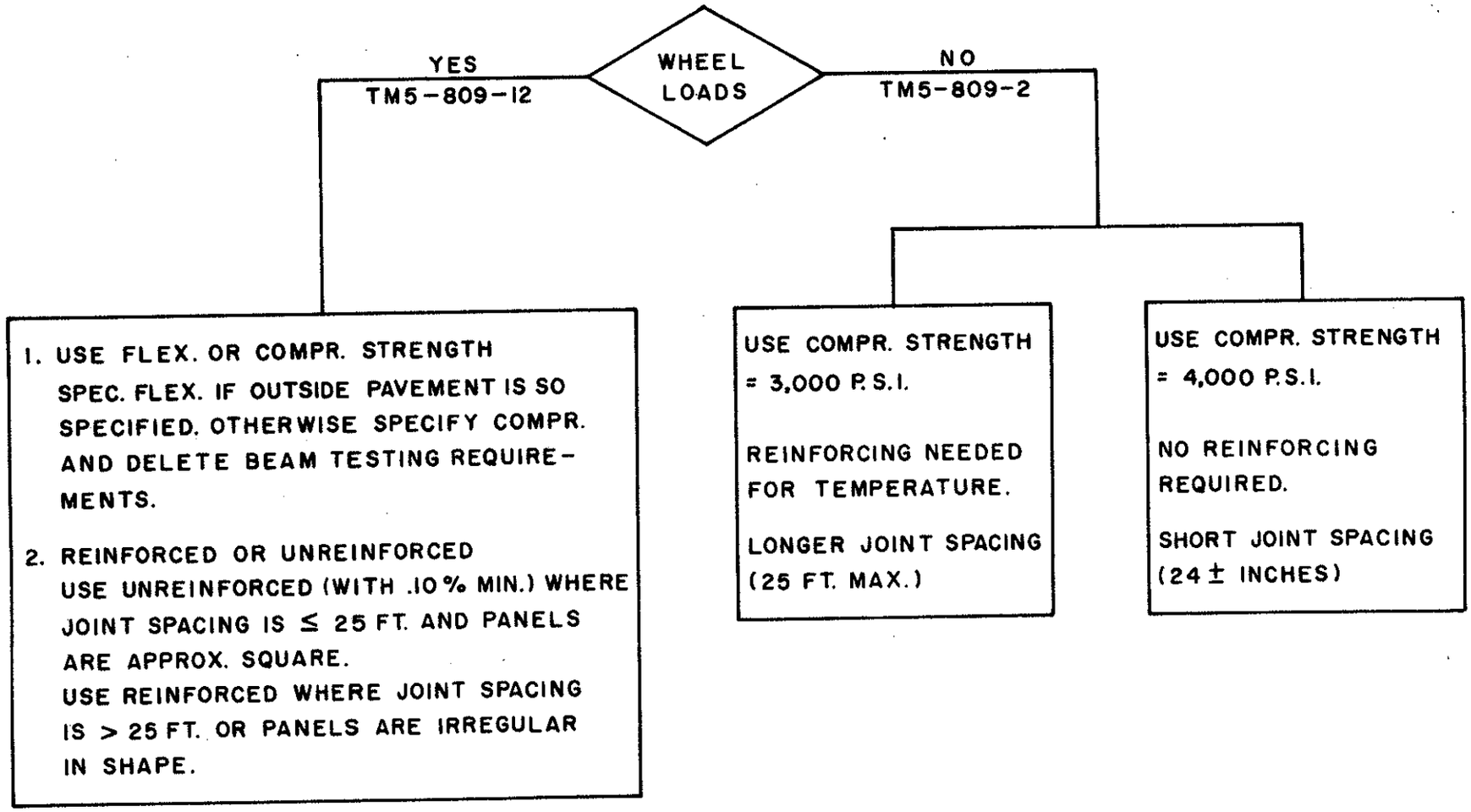

SLAB-ON-GRADE DESIGN CRITERIA

EXHIBIT A-2-16

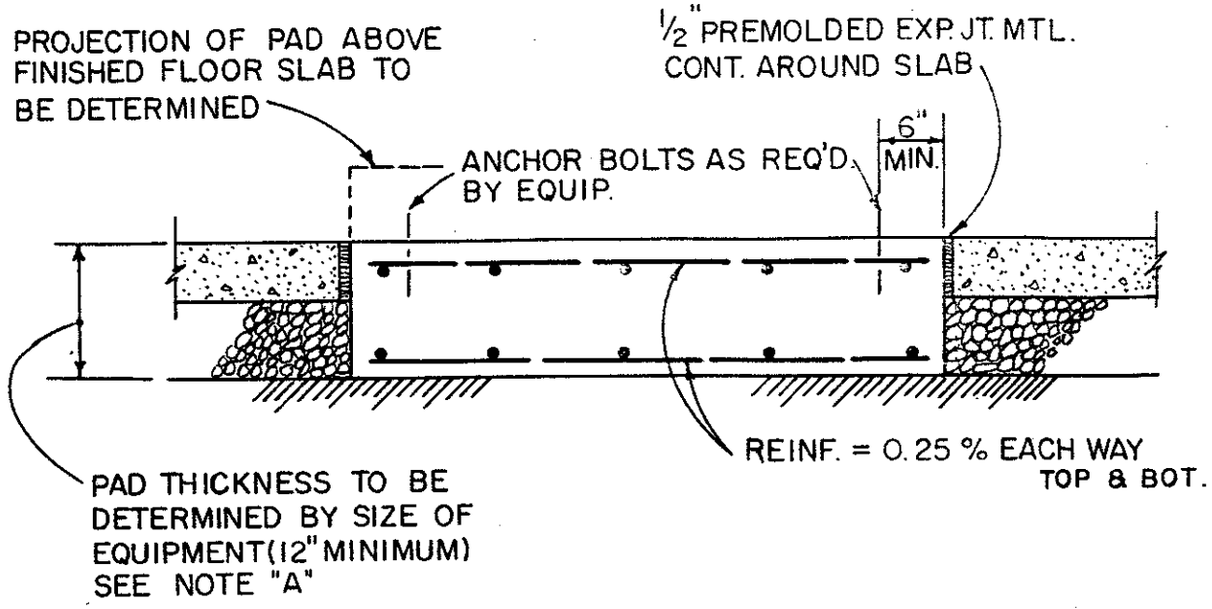

ENGINE GENERATOR SET PAD DETAIL

NOTE "A"

WEIGHT OF CONC. PAD TO BE 5 TIMES THE WEIGHT OF ROTATING PARTS & A MINIMUM OF 1½ TIMES THE TOTAL WEIGHT OF SET. FOR HIGH PRESSURE AIR COMPRESSORS OR OTHER EQUIPMENT WHICH WILL PRODUCE A LOT OF VIBRATION, USE 3 x WEIGHT OF SET.

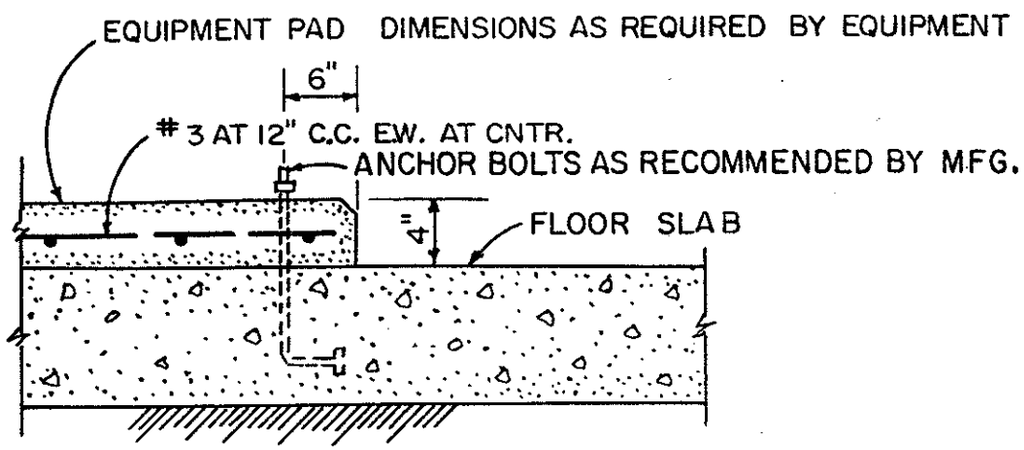

SECTION THRU EQUIPMENT PADS

EXHIBIT A-2-17

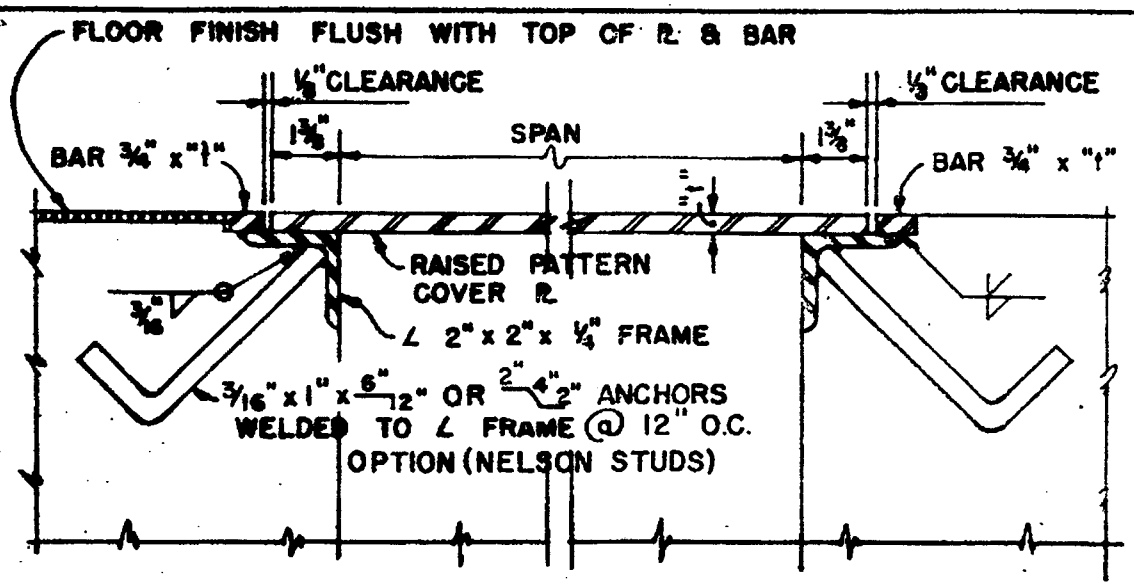

TRENCH COVER PLATE DETAILS

COVER PL. SECTIONS TO BE HELD DOWN WITH F.H. COUNTERSUNK SCREWS (4 SCREWS /w SECTIONS)

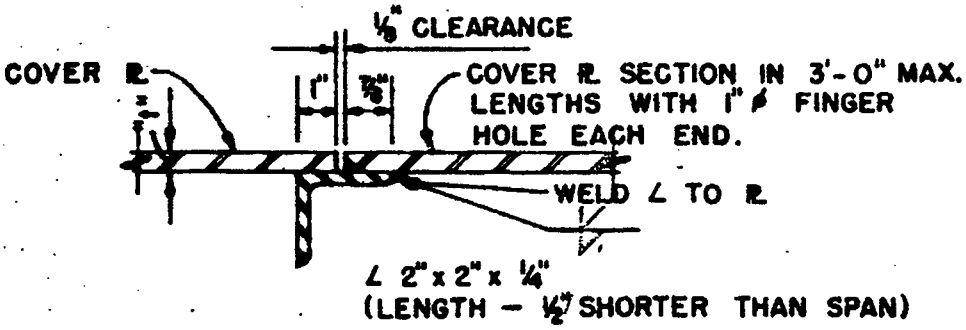

SECTION "A-A"

SPAN	"t" THICKNESS
1'-0"	1/8"
1'-6"	3/16"
2'-0"	1/4"
2'-6"	5/16"
3'-0"	3/8"
3'-6"	7/16"

TABLE OF MINIMUM COVER PLATE THICKNESS

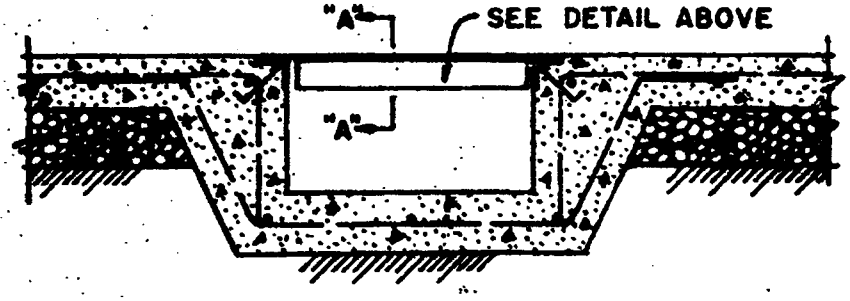

TYPICAL TRENCH SECTION

TYPICAL CABLE TRENCH DETAILS

(APPLIES ALSO TO SIDE WALK DRAINS, FUEL TRENCHES ETC.)

EXHIBIT A-2-18

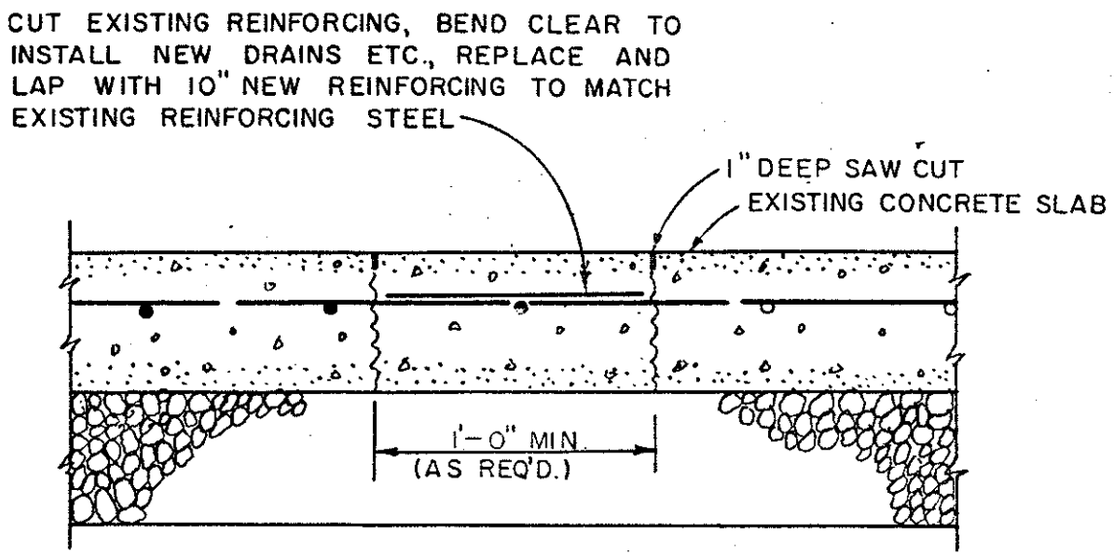

DETAIL OF SLAB REMOVAL & REPLACEMENT FOR NEW FLOOR DRAIN AND PLUMBING

EXHIBIT A-2-19

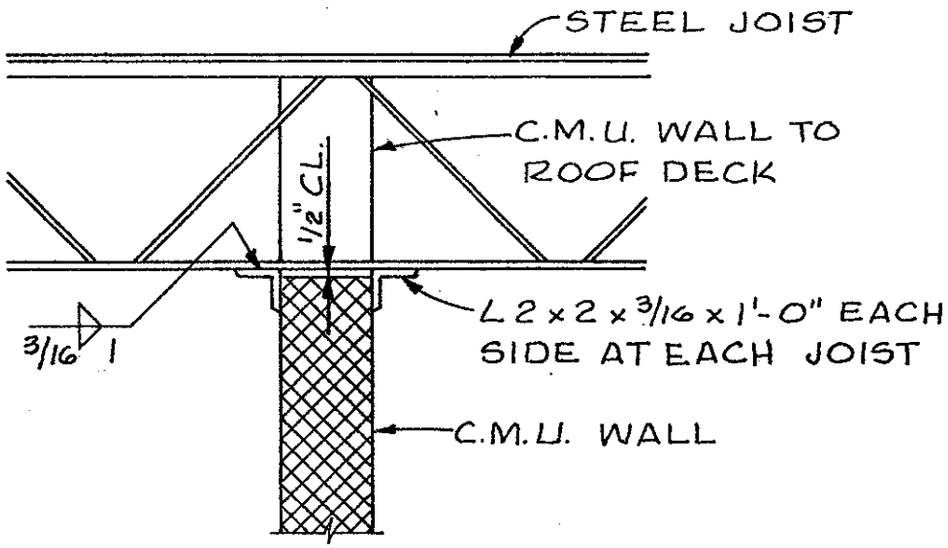

DETAIL I

LATERAL BRACING FOR WALLS PERPINDICULAR TO JOIST

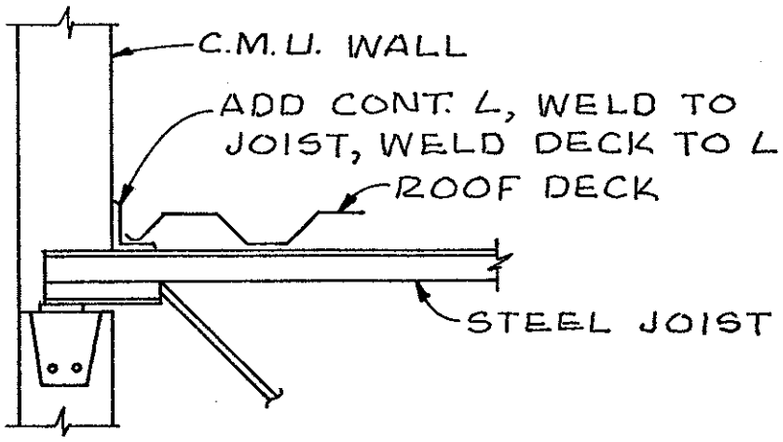

DETAIL IA

TYPICAL JOIST DETAILS

EXHIBIT A-2-20

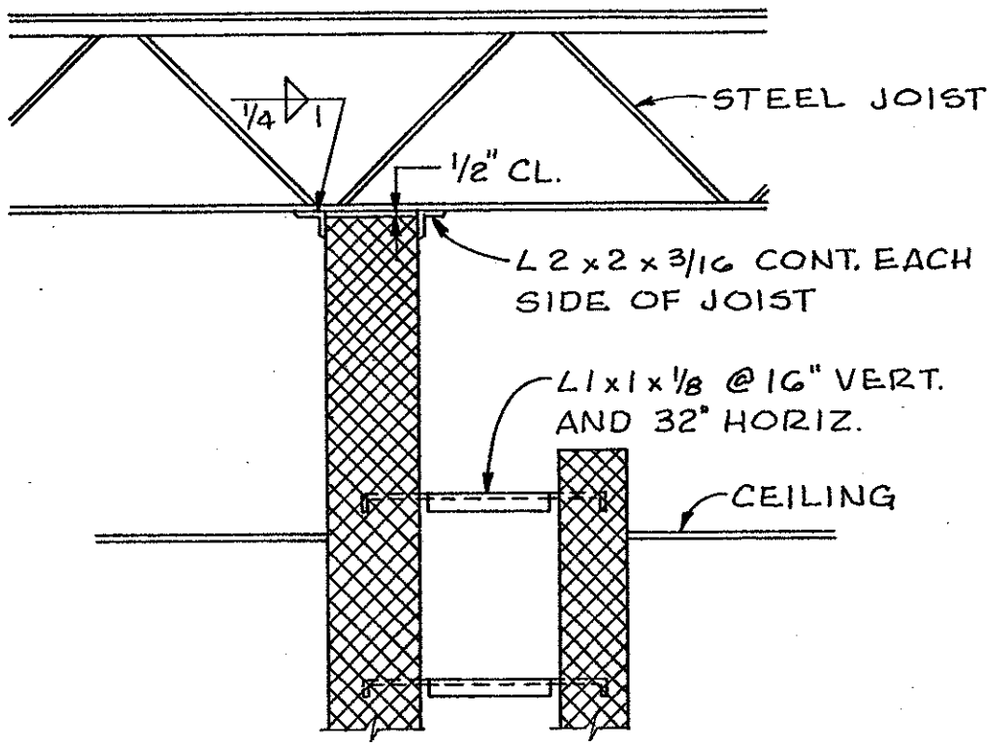

CHASE PARTITION BRACING

EXHIBIT A-2-21

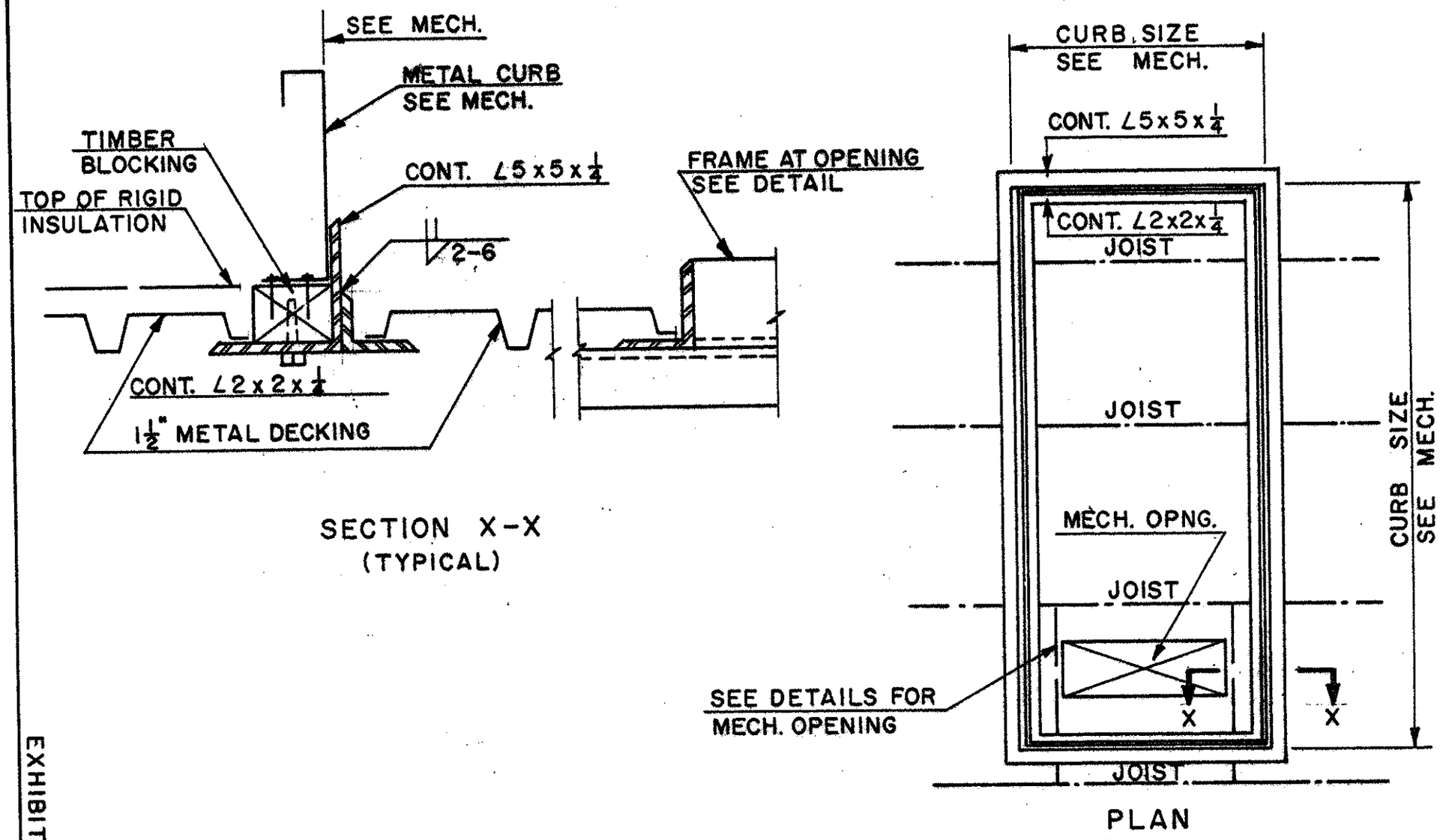

EXHIBIT A-2-22

DETAIL OF SUPPORTS FOR ROOF TOP CURBS UNDER MECHANICAL EQUIPMENT

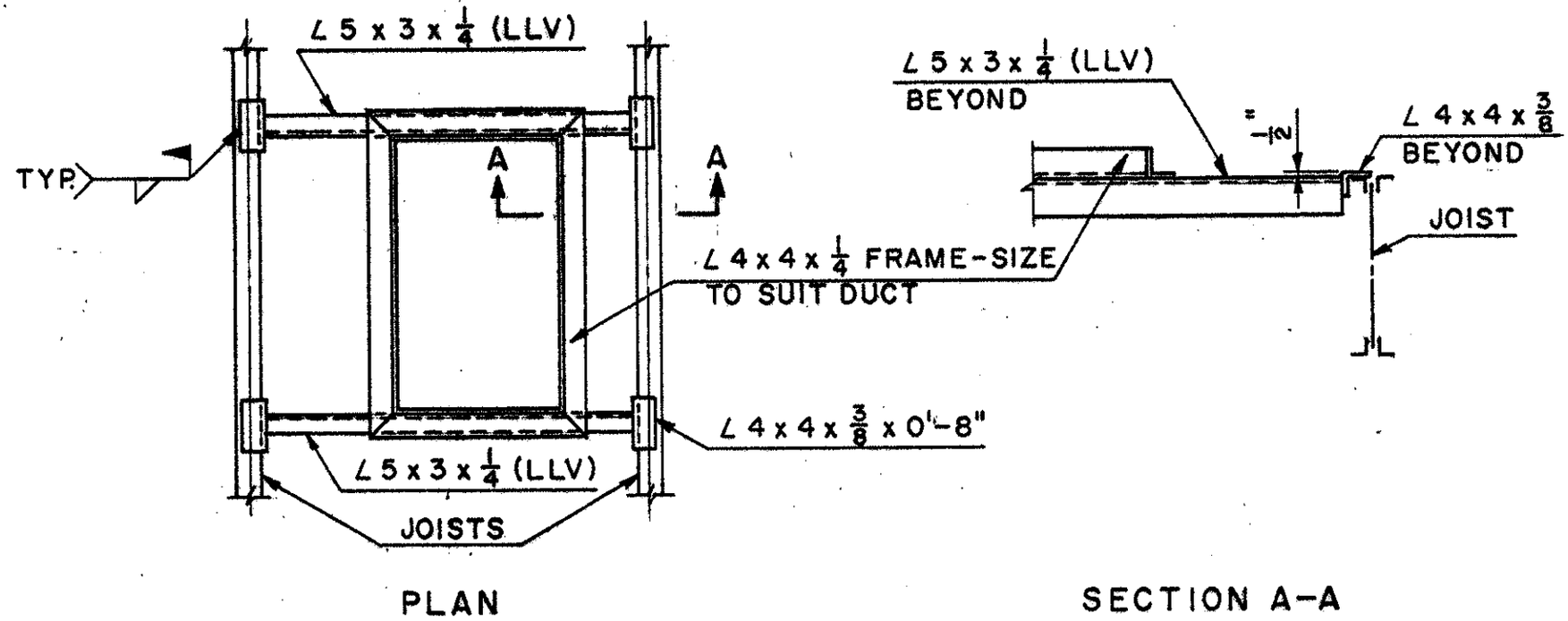

FRAMING FOR TYPICAL ROOF OPENING

EXHIBIT A-2-23

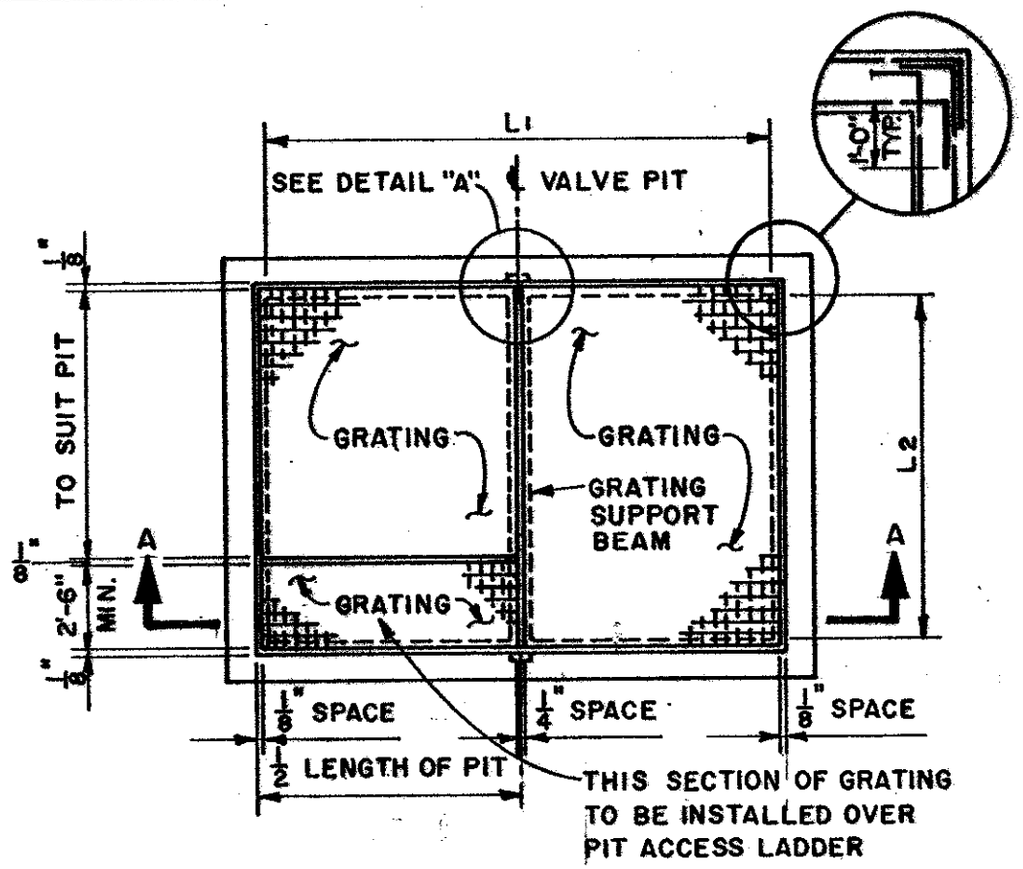

PLAN AT GRATING

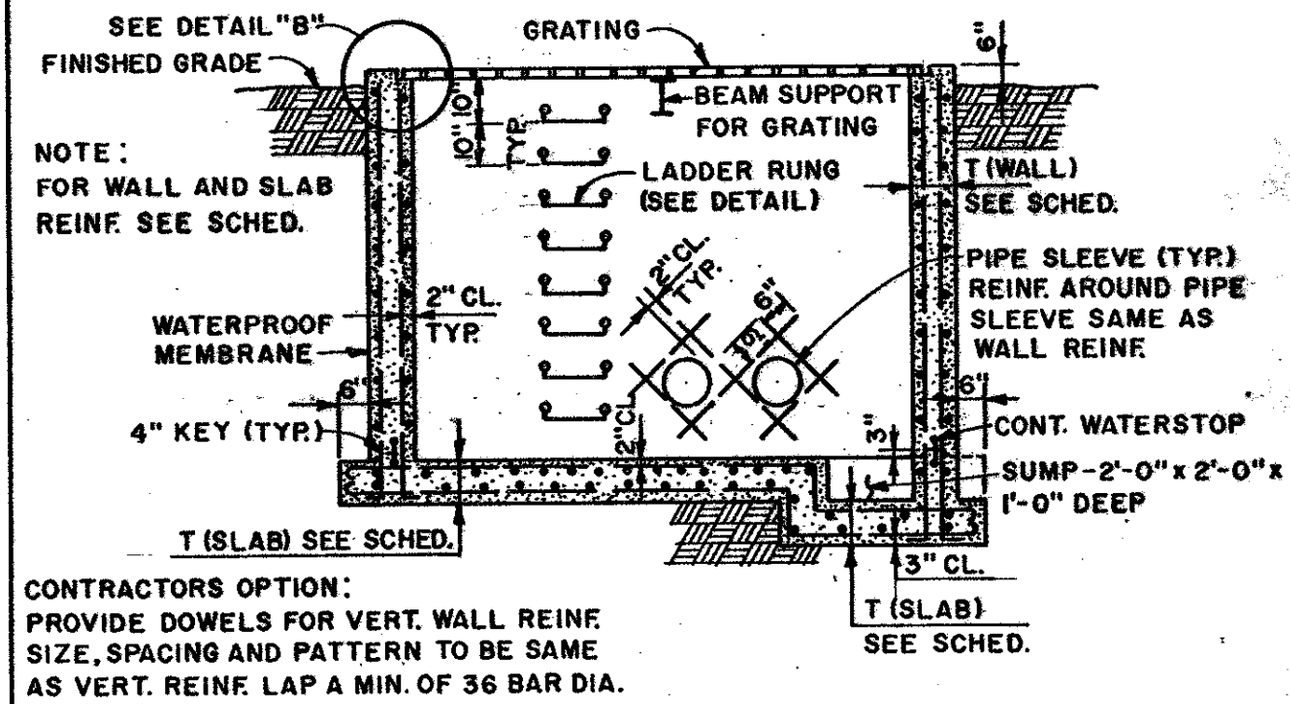

SECTION A-A

TYPICAL VALVE OR DRAIN PIT CONSTRUCTION

NOT TO SCALE

EXHIBIT A-2-24

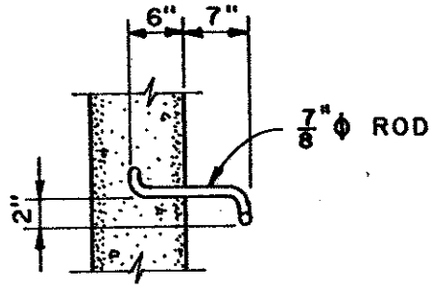

LADDER RUNG DETAIL

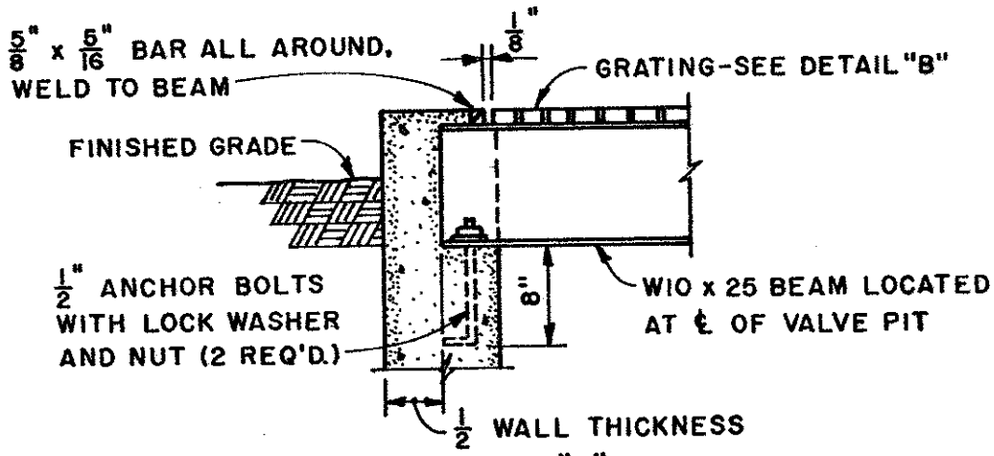

DETAIL "A"

BEAM SUPPORT FOR GRATING

GRATING SHALL BE GALVANIZED AND CONFORM TO FEDERAL SPEC. RR-G-661. GRATING OVER PIT, EXCEPT LADDER ACCESS PORTION, TO BE 1 1/2" BEARING BARS AT 1 3/16" AND 5/16" x 5/16" TWISTED CROSS BARS AT 4" O.C. GRATING OVER ACCESS LADDER TO BE 1 1/2" x 1/8" BEARING BARS. EXTERIOR EDGES OF GRATING SHALL BE BANDED WITH BARS OF SAME SIZE AS BEARING BARS.

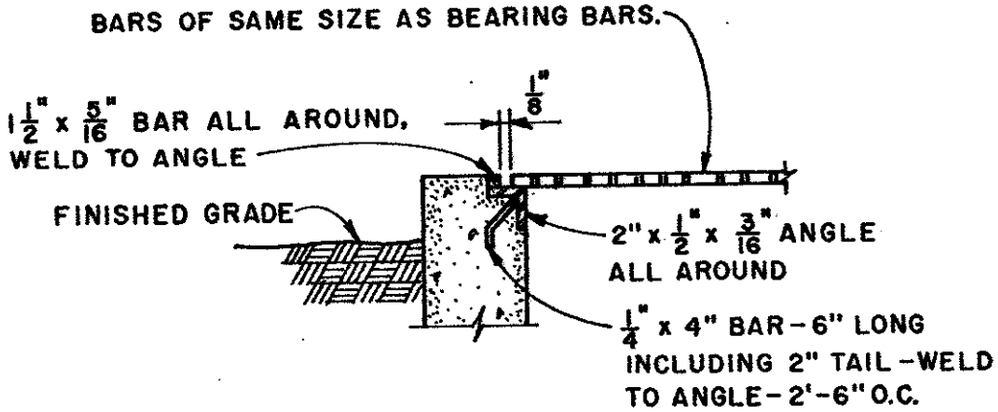

DETAIL "B"

ANGLE SUPPORT FOR GRATING

TYPICAL VALVE OR DRAIN PIT CONSTRUCTION

NOT TO SCALE

EXHIBIT A-2-25

VALVE OR DRAIN PIT SCHEDULE

PIT NO.	L1	L2	L3 **	T (WALL)	T (SLAB)	WALL REINFORCEMENT		SLAB REINFORCEMENT			
								TOP		BOTTOM	
						HORIZ. FACE	VERT. FACE	SHORT WAY ***	LONG WAY	SHORT WAY ***	LONG WAY
*1	21'-0"	21'-0"	7'-0"	1'-6"	1'-6"	#6@12" O.C.	#4@12" O.C.	#5@12" O.C.	#5@12" O.C.	#4@12" O.C.	#4@12" O.C.
2	16'-6"	16'-6"	7'-0"	10"	10"	#7@12" O.C.	#4@12" O.C.	#6@12" O.C.	#6@12" O.C.	#4@12" O.C.	#4@12" O.C.
*3	21'-0"	14'-0"	7'-0"	1'-0"	1'-0"	#7@12" O.C.	#4@12" O.C.	#6@12" O.C.	#4@12" O.C.	#4@12" O.C.	#4@12" O.C.
4	18'-0"	14'-0"	7'-0"	10"	10"	#7@12" O.C.	#4@12" O.C.	#6@12" O.C.	#5@12" O.C.	#4@12" O.C.	#4@12" O.C.
5	14'-0"	7'-0"	7'-0"	10"	10"	#5@12" O.C.	#4@12" O.C.	#4@12" O.C.	#4@12" O.C.	#4@12" O.C.	#4@12" O.C.
6	7'-0"	7'-0"	7'-0"	10"	10"	#4@12" O.C.	#4@12" O.C.	#4@12" O.C.	#4@12" O.C.	#4@12" O.C.	#4@12" O.C.
*7	27'-0"	18'-0"	9'-0"	1'-4"	1'-4"	#7@12" O.C.	#4@12" O.C.	#7@12" O.C.	#5@12" O.C.	#4@12" O.C.	#4@12" O.C.
8	21'-0"	18'-0"	9'-0"	1'-0"	1'-0"	#8@12" O.C.	#5@12" O.C.	#7@12" O.C.	#6@12" O.C.	#4@12" O.C.	#4@12" O.C.
9	18'-0"	9'-0"	9'-0"	1'-0"	1'-0"	#6@12" O.C.	#5@12" O.C.	#5@12" O.C.	#4@12" O.C.	#4@12" O.C.	#4@12" O.C.
10	9'-0"	9'-0"	9'-0"	1'-0"	1'-0"	#5@12" O.C.	#4@12" O.C.	#4@12" O.C.	#4@12" O.C.	#4@12" O.C.	#4@12" O.C.
11	20'-0"	15'-0"	10'-0"	1'-0"	1'-0"	#7@12" O.C.	#5@12" O.C.	#7@12" O.C.	#5@12" O.C.	#4@12" O.C.	#4@12" O.C
*12	33'-0"	22'-0"	11'-0"	1'-8"	1'-8"	#8@12" O.C.	#5@12" O.C.	#8@12" O.C.	#6@12" O.C.	#5@12" O.C.	#5@12" O.C.
13	25'-0"	22'-0"	11'-0"	1'-2"	1'-2"	#7@6" O.C.	#6@12" O.C.	#6@6" O.C.	#8@12" O.C.	#4@12" O.C.	#4@12" O.C.
14	22'-0"	16'-6"	11'-0"	1'-2"	1'-2"	#7@12" O.C.	#5@12" O.C.	#8@12" O.C.	#6@12" O.C.	#4@12" O.C.	#4@12" O.C.
15	16'-6"	11'-0"	11'-0"	1'-2"	1'-2"	#6@12" O.C.	#5@12" O.C.	#5@12" O.C.	#4@12" O.C.	#4@12" O.C.	#4@12" O.C.
16	11'-0"	11'-0"	11'-0"	1'-2"	1'-2"	#5@12" O.C.	#4@12" O.C.	#4@12" O.C.	#4@12" O.C.	#4@12" O.C.	#4@12" O.C.
17	26'-0"	19'-6"	13'-0"	1'-4"	1'-4"	#8@12" O.C.	#6@12" O.C.	#6@6" O.C.	#7@12" O.C.	#4@12" O.C.	#4@12" O.C.
18	26'-0"	13'-0"	13'-0"	1'-4"	1'-4"	#8@12" O.C.	#6@12" O.C.	#7@12" O.C.	#4@12" O.C.	#4@12" O.C.	#4@12" O.C.
19	13'-0"	13'-0"	13'-0"	1'-4"	1'-4"	#6@12" O.C.	#4@12" O.C.	#5@12" O.C.	#5@12" O.C.	#4@12" O.C.	#4@12" O.C.

EXHIBIT A-2-26

VALVE OR DRAIN PIT SCHEDULE

PIT NO.	L1	L2	L3 **	T (WALL)	T (SLAB)	WALL REINFORCEMENT		SLAB REINFORCEMENT			
								TOP		BOTTOM	
						HORIZ. FACE	VERT. FACE	SHORT WAY ***	LONG WAY	SHORT WAY ***	LONG WAY
20	30'-0"	22'-6"	15'-0"	1'-6"	1'-6"	#7@6" O.C.	#7@12" O.C.	#7@ 6" O.C.	#8@12" O.C.	#4@12" O.C.	#4@12" O.C.
21	22'-6"	15'-0"	15'-0"	1'-6"	1'-6"	#8@12" O.C.	#6@12" O.C.	#7@12" O.C.	#5@12" O.C.	#4@12" O.C.	#4@12" O.C.
22	15'-0"	15'-0"	15'-0"	1'-6"	1'-6"	#7@12" O.C.	#4@12" O.C.	#5@12" O.C.	#5@12" O.C.	#4@12" O.C.	#4@12" O.C.

NOTES: f'c = 3 KSI fy = 60 KSI

* WALL AND SLAB THICKNESS INCREASED DUE TO BOUYANCY.

** L3 REPRESENTS DIMENSION FROM TOP OF VALVE PIT TO TOP OF FLOOR SLAB.

*** SHORT WAY INDICATES REINFORCING PARALLEL TO SHORT SIDE. SEE VALVE PIT DETAILS AND PROFILES.

ASSUMPTIONS:

a. INTERNAL ANGLE OF FRICTION, $\phi = 30^\circ$

b. SATURATED UNIT WEIGHT OF SOIL, γ_{sat} = 130 pcf

c. γ_{sat} = 100 pcf (WHEN CHECKING BOUYANCY)

d. COEFFICIENT OF AT-REST EARTH PRESSURE, $K_o = 0.5$

e. SURCHARGE, 300 PSF

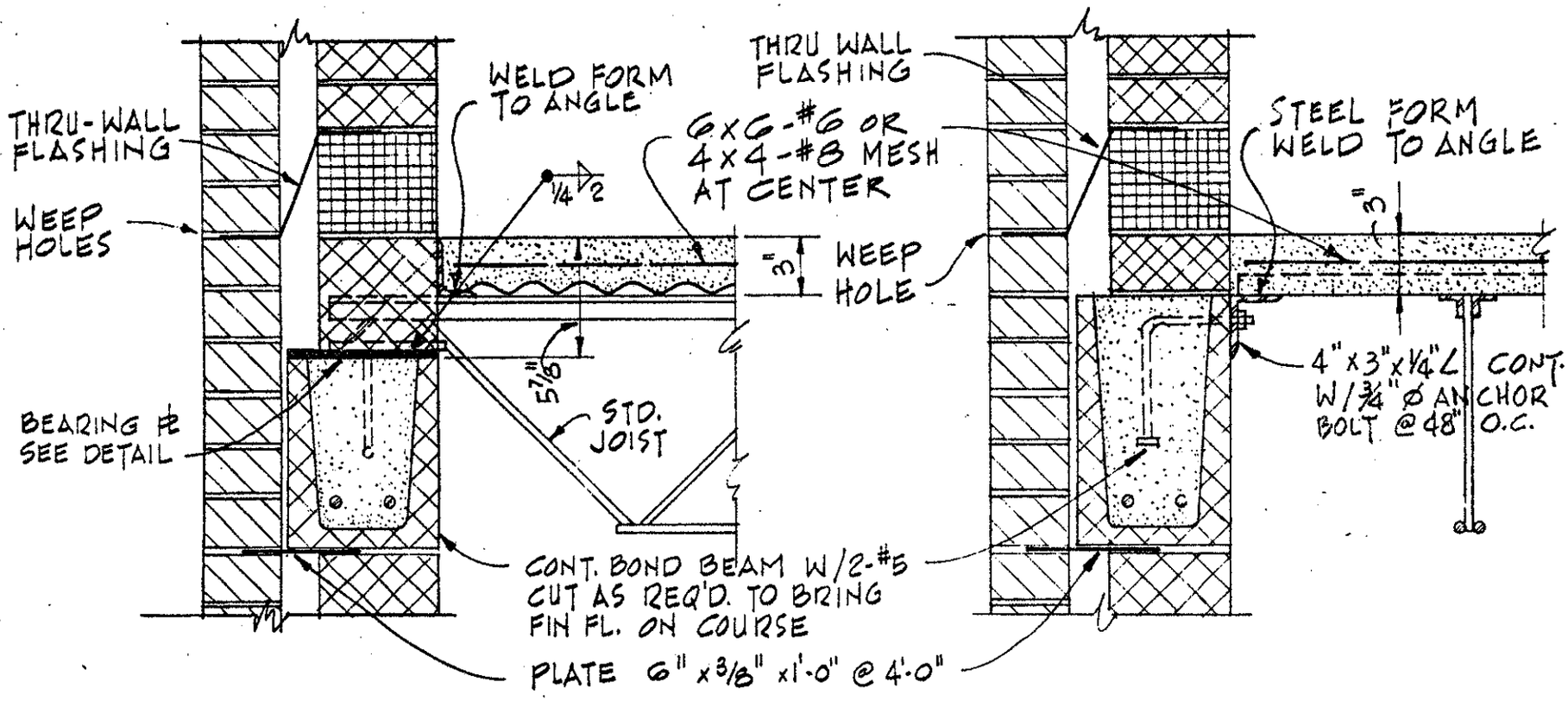

TYPICAL LOAD BEARING WALL
SECOND FLOOR DETAILS

EXHIBIT A-2-28

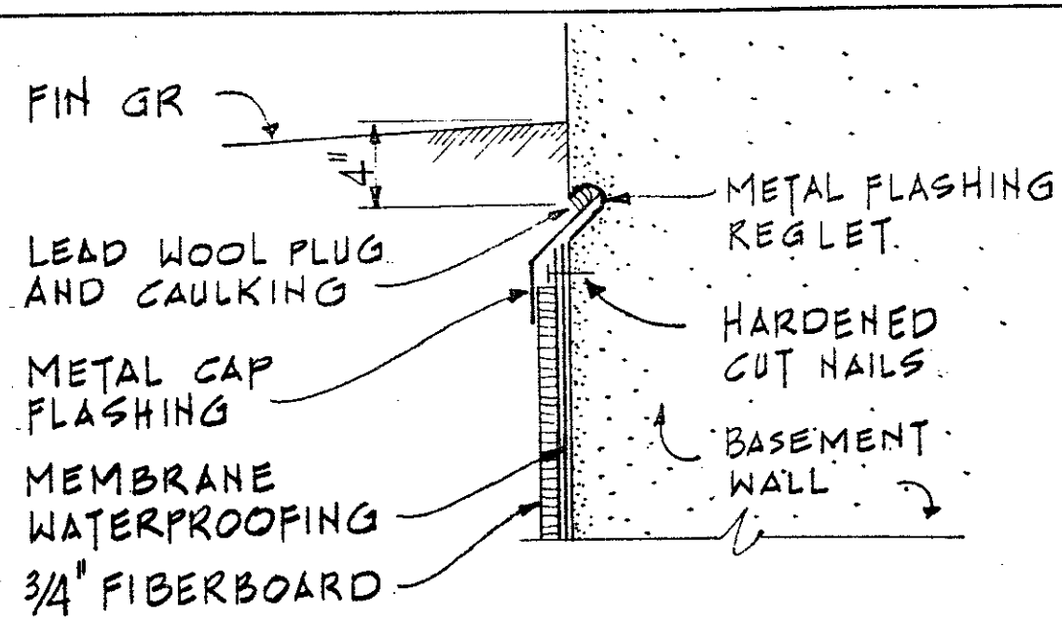

WALL & REGLET DETAIL

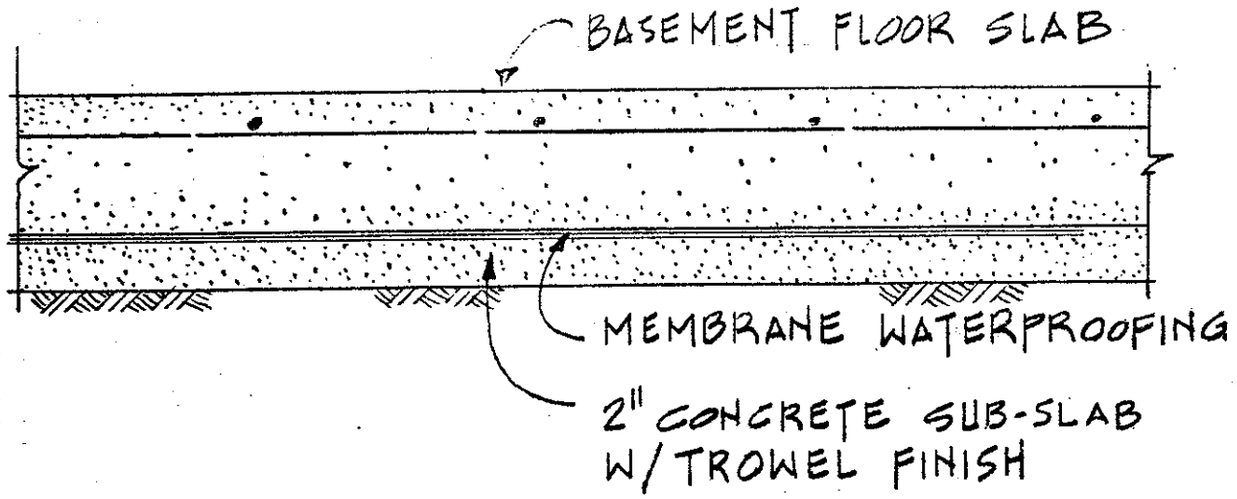

FLOOR SLAB

BASEMENT WATERPROOFING

EXHIBIT A-2-29

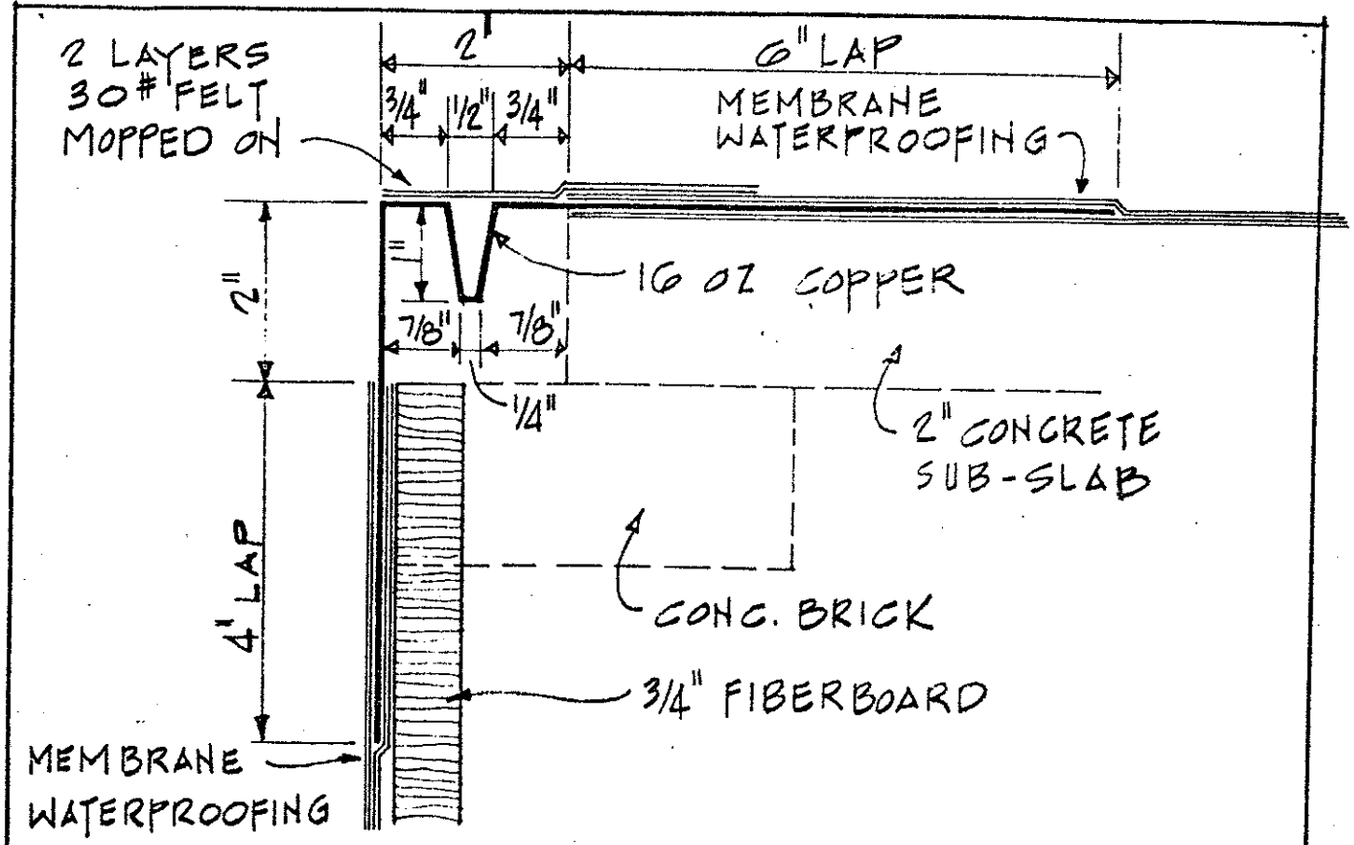

COPPER BELLOWS

SCALE 6" = 1'-0"

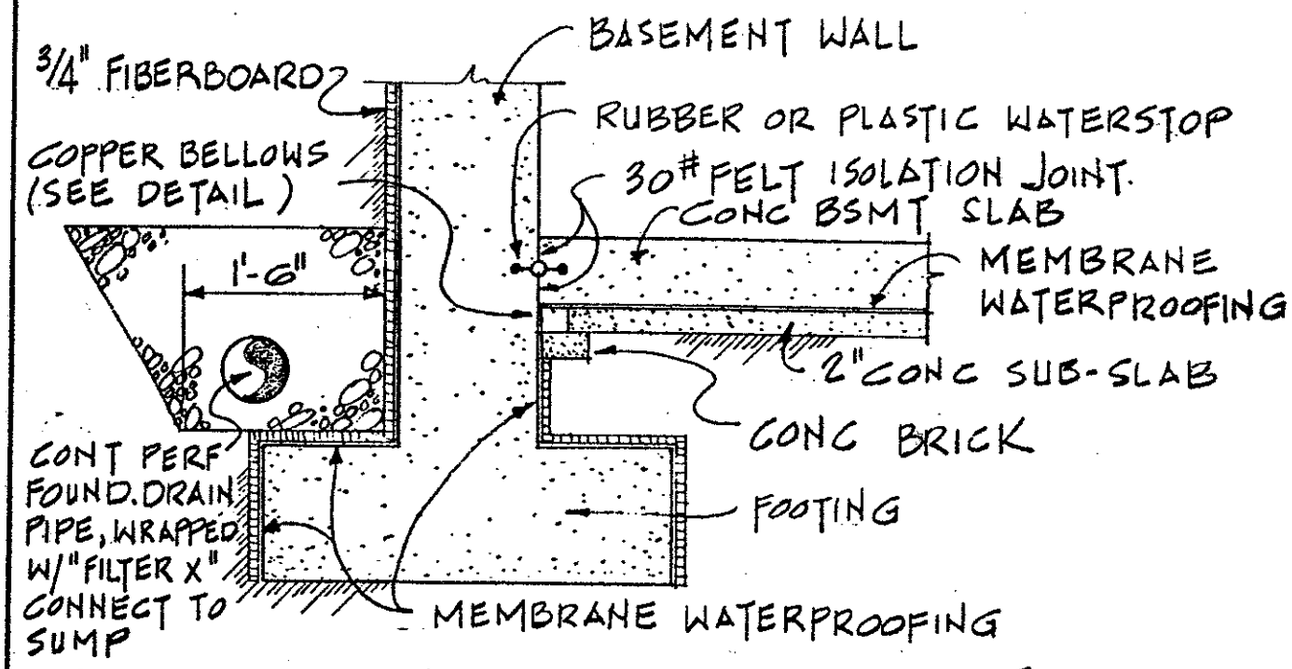

TYPICAL FLOOR TO WALL SECTION

BASEMENT WATERPROOFING DETAILS

EXHIBIT A-2-30

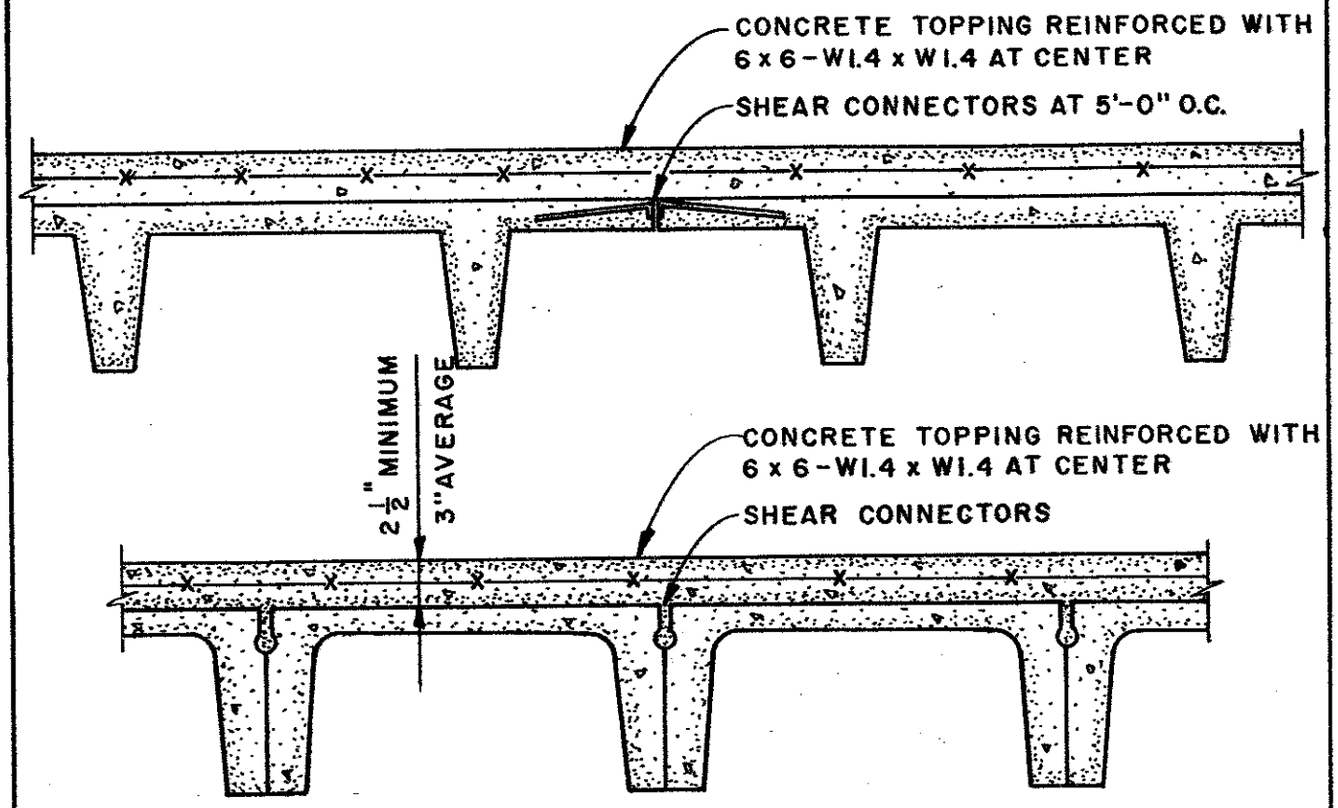

TYPICAL PRECAST FLOOR SYSTEMS

NOTES:

1. PRECAST FLOOR SYSTEM MAY BE DOUBLE TEE, CHANNEL SLAB OR CORED SLAB, PRESTRESSED OR NOT, LIGHTWEIGHT OR HARD-ROCK CONCRETE DESIGNED AS CONTINUOUS OR SINGLE SPANS, WITH (EXCEPT AT DEPRESSED AREAS) OR WITHOUT COMPOSITE ACTION WITH TOPPING.
2. FLOOR SYSTEMS SHALL BE DESIGNED FOR THE LIVE LOADS SHOWN AND FOR THE ACTUAL DEAD LOADS. EQUIPMENT LOADS WILL BE INCLUDED WHERE IT EXCEEDS THE LIVE LOAD.
3. PRECAST UNITS WILL BE 4000 P.S.I. CONCRETE (MIN) AND HAVE NOT MORE THAN 1/2" IN PLACE DIFFERENTIAL CAMBER BETWEEN ADJACENT UNITS.
4. TOPPING SHALL BE 3000 P.S.I. HARDROCK OR LT.WT. CONCRETE WITH A MINIMUM THICKNESS OF 2½" AT ANY POINT (EXCEPT AT DEPRESSED AREAS) AND VARY IN THICKNESS AS REQUIRED BY CAMBER IN UNITS SO AS TO PROVIDE A LEVEL FINISHED FLOOR UNDER DEAD LOADS. TOPPING IS NOT REQUIRED FOR CORED SLABS IF CARPETING IS USED.
5. TOPPING IS NOT REQUIRED FOR ROOF SLABS.

EXHIBIT A-2-33

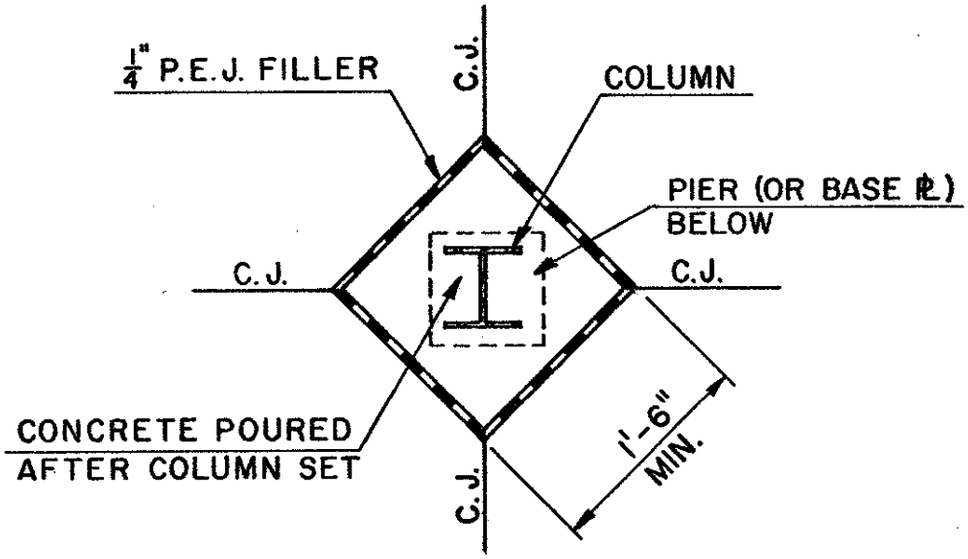

ISOLATION JOINT DETAIL IN CONCRETE SLABS AT COLUMNS

NOTE:
SEE PLAN FOR EXACT SHAPE OF EXTERIOR ISOLATION JOINTS.

EXHIBIT A-2-37

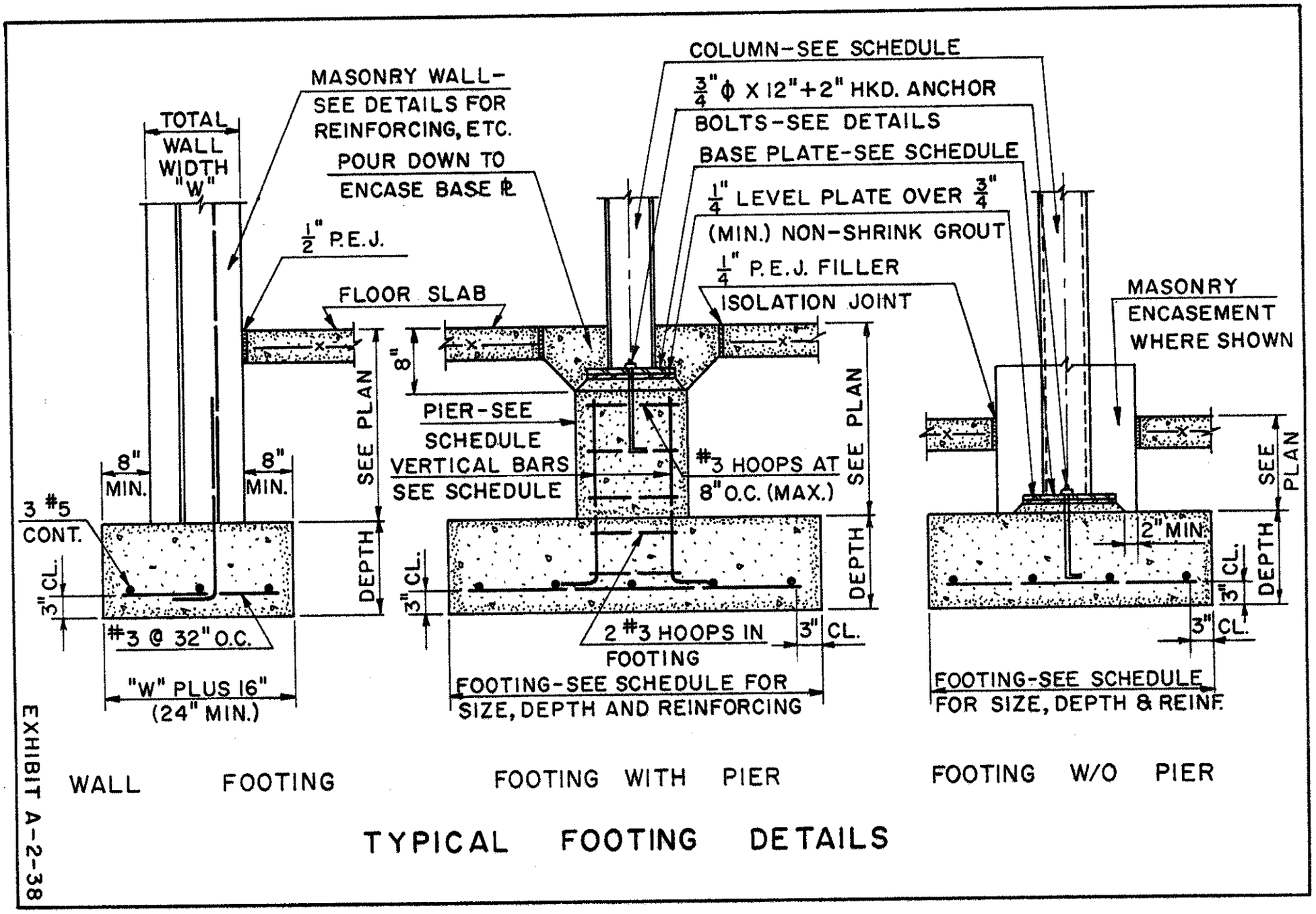

TYPICAL FOOTING DETAILS

EXHIBIT A-2-38

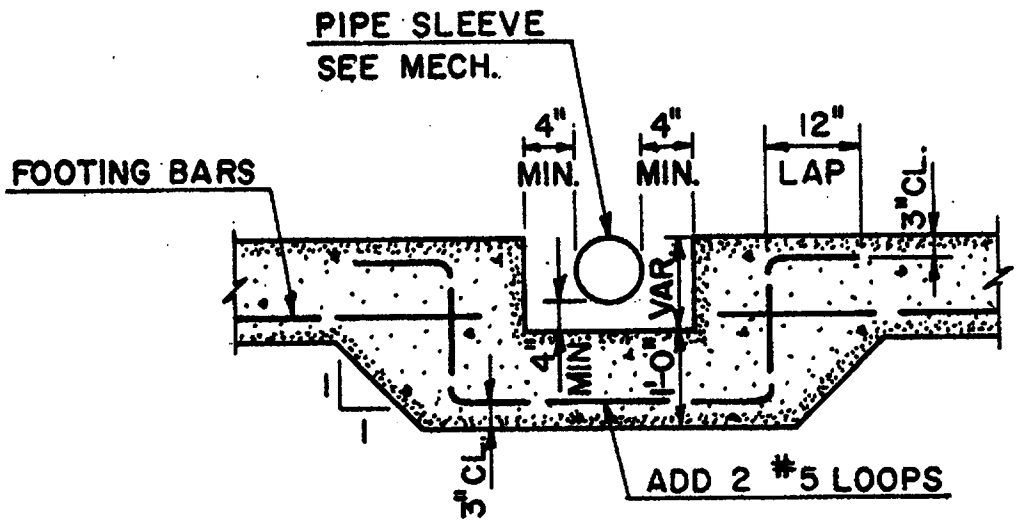

TYPICAL STEPS IN WALL FOOTINGS AT GRAVITY PLUMBING LINES

NOTES:

1. ADDED REINF. SAME NUMBER AND SIZE AS FOOTING BARS.
2. ALL REINF. TO BE SUPPORTED ON CONCRETE BRICKS AT 4'-0" MAX. O.C.
3. SEE PLATE M- FOR GRAVITY PLUMBING LINE LOCATIONS.

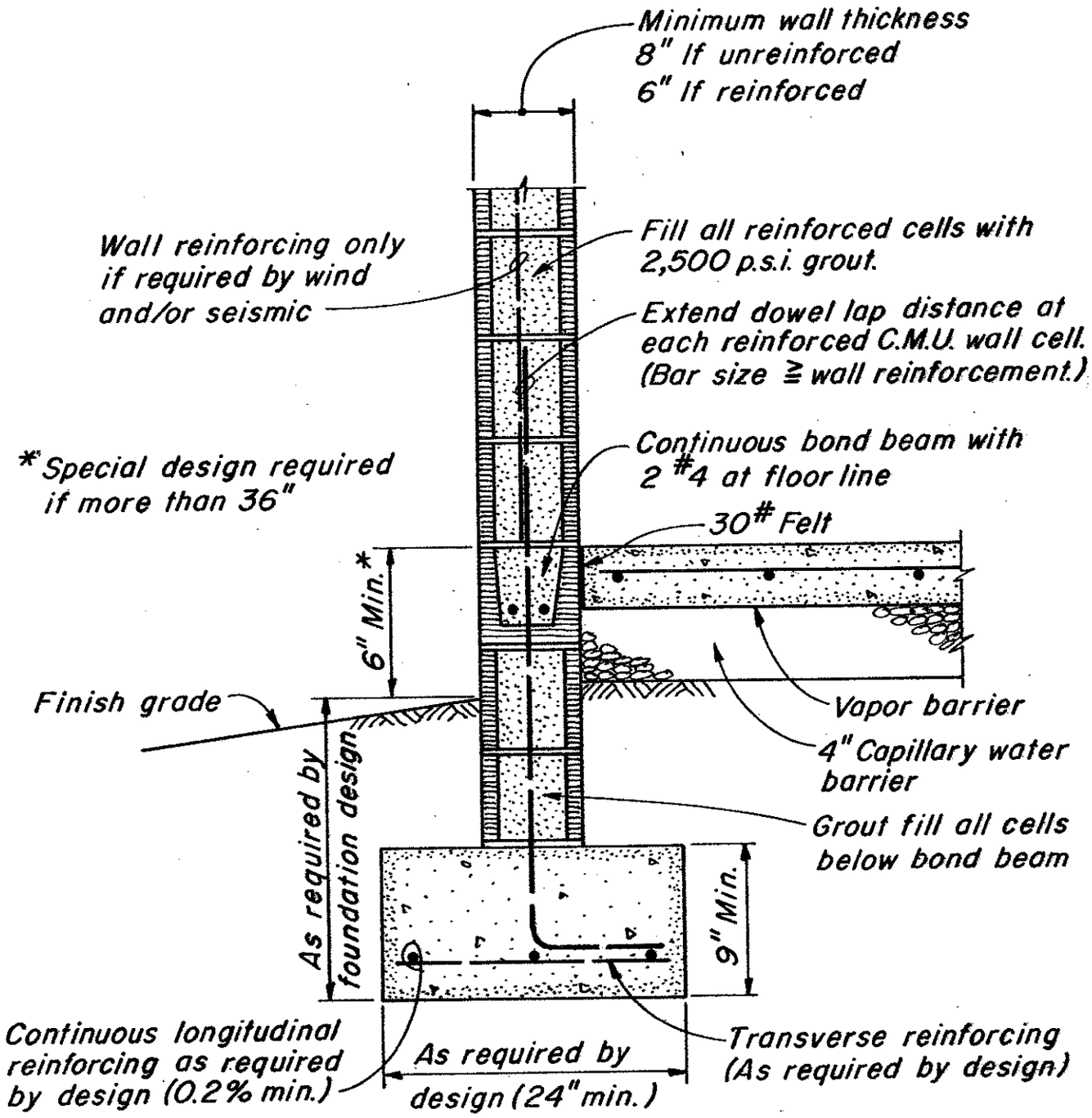

CONTINUOUS SPREAD FOOTING
WITH C.M.U. FOUNDATION WALL
(SINGLE WYTHE C.M.U. WALL)

EXHIBIT A-2-40

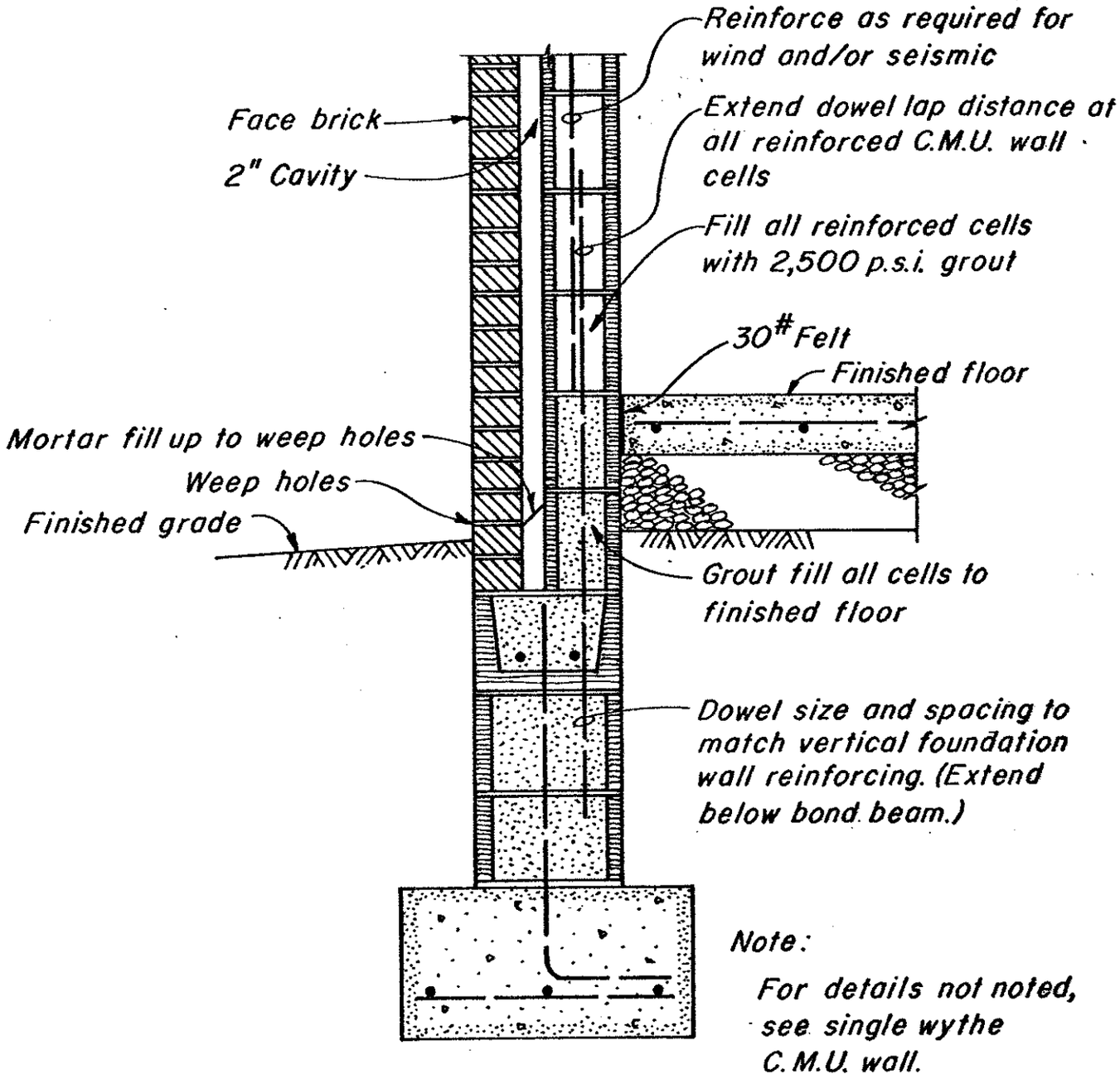

CONTINUOUS SPREAD FOOTING
WITH C.M.U. FOUNDATION WALL
(BRICK - C.M.U. CAVITY WALL SHOWN)

EXHIBIT A-2-41

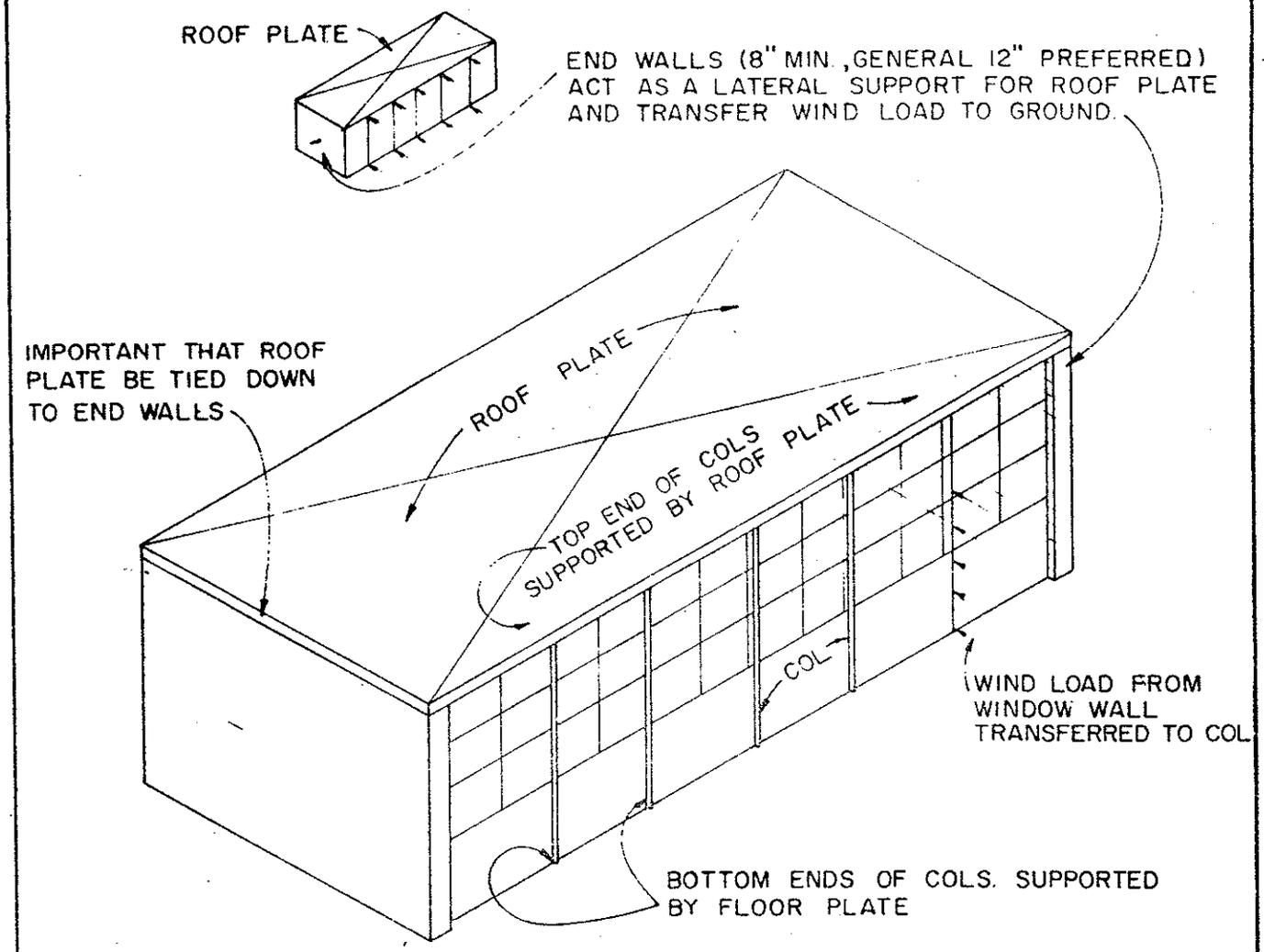

NOTES:

1. WINDOWS OR CURTAIN WALLS ACT AS SLABS TO TRANSFER WIND LOADS TO COLS. OR TO ROOF PLATE.
2. COLS ACT AS VERTICAL BMS TO TRANSFER WIND LOAD TO FLOOR AND ROOF PLATE.
3. ROOF PLATE ACTS AS HORIZONTAL GIRDER TO TRANSFER LOAD TO END WALLS
*4. END WALLS TRANSFER LOAD TO GROUND.
5. LONGITUDINAL STABILITY SHOULD ALSO BE CHECKED.

WIND FRAMING

ROOF PLATE SYSTEM

*PROVIDING RATIO OF HEIGHT TO WIDTH OF BLDG. PROVIDE STABLE CONDITION AGAINST OVERTURNING

EXHIBIT A-2-42

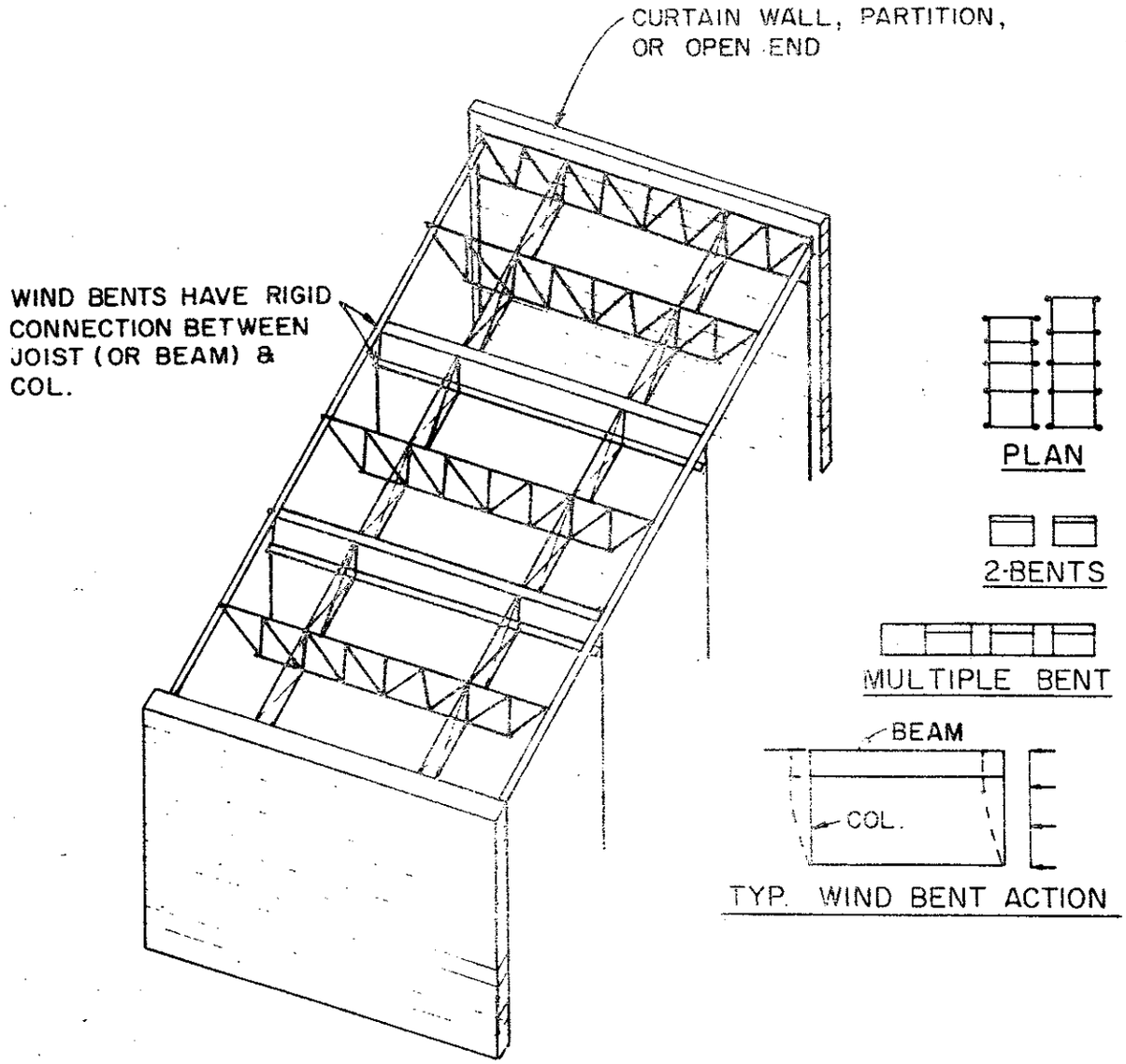

NOTES:

1. THIS TYPE STRUCTURE DESIGNED TO WITHSTAND WIND LOAD WITHOUT BENEFIT OF ROOF PLATE OR END WALLS.
2. THIS SYSTEM REQUIRES THAT COLS FORMING A BENT SHOULD BE DIRECTLY OPPOSITE EACH OTHER.
3. IN CASE OF 2-BENT (OR MULTIPLE BENT) IT IS NOT NECESSARY, THOUGH DESIRABLE, TO HAVE BENTS LINE UP.
4. LONGITUDINAL STABILITY SHOULD ALSO BE CHECKED. (THAT IS, THE RIGIDITY OF THE CONNECTIONS)
5. FLAT ROOF SHOWN; ACTUALLY ALL ROOFS SLOPE.

WIND FRAMING

BENT SYSTEM

EXHIBIT A-2-43

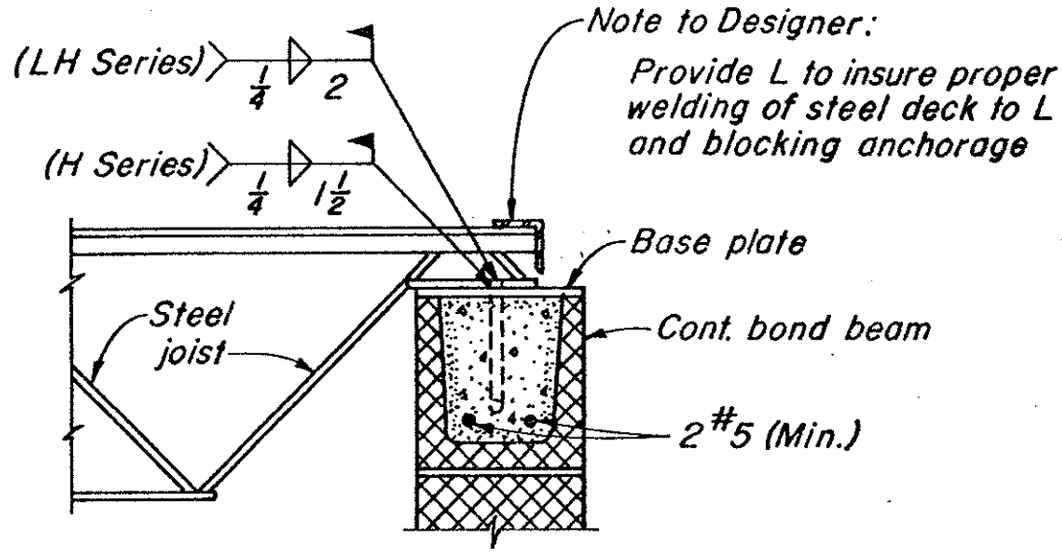

JOIST ANCHORAGE DETAIL

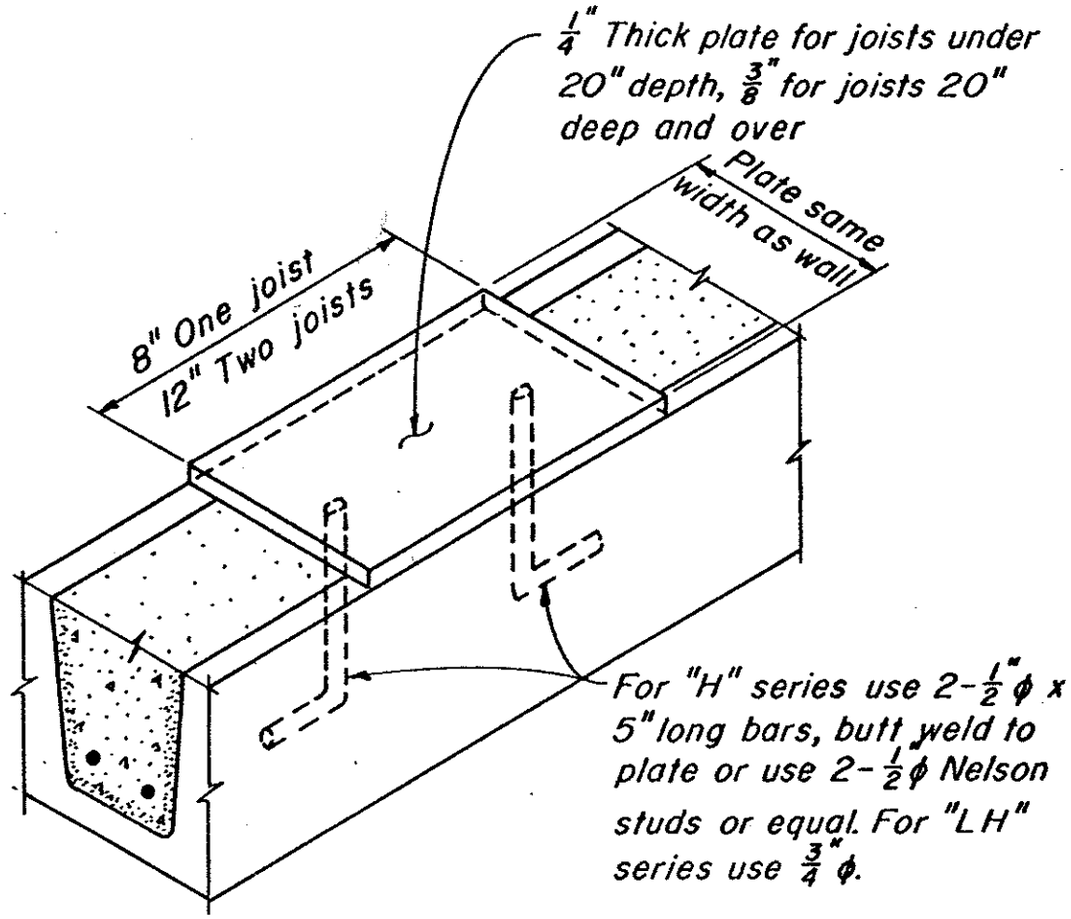

TYPICAL STEEL JOIST BASE PLATE DETAIL

EXHIBIT A-2-44

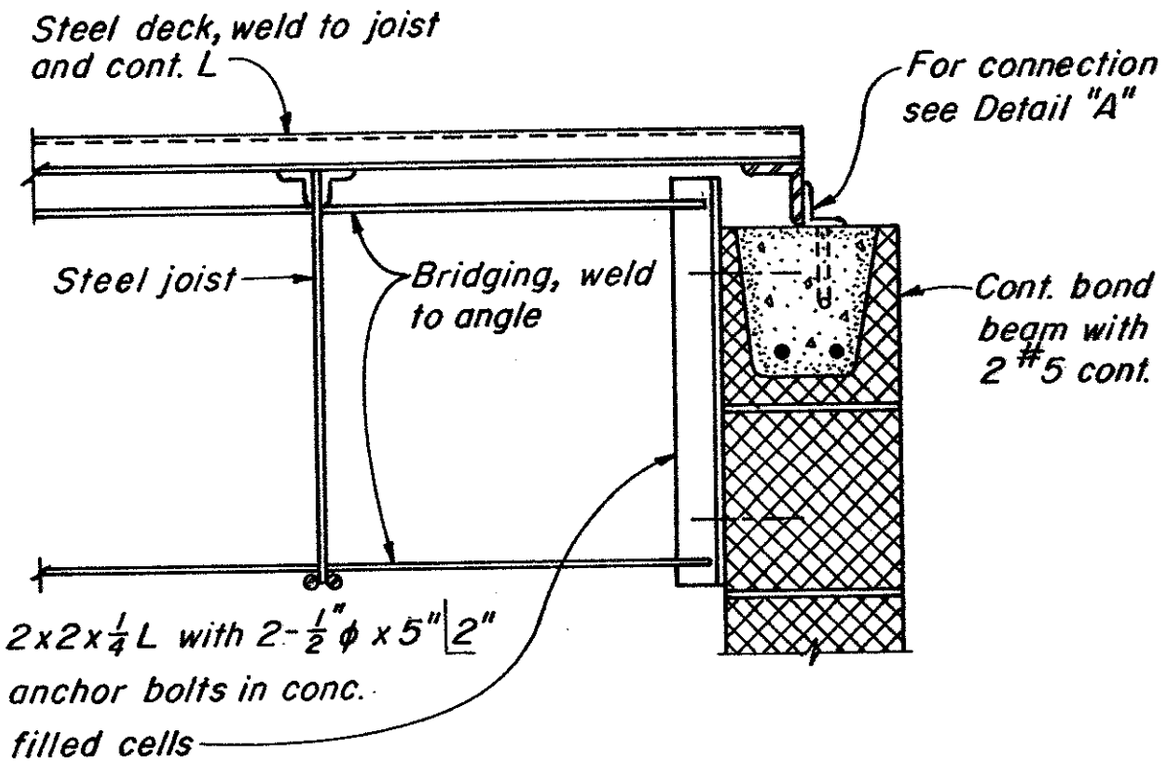

SECTION

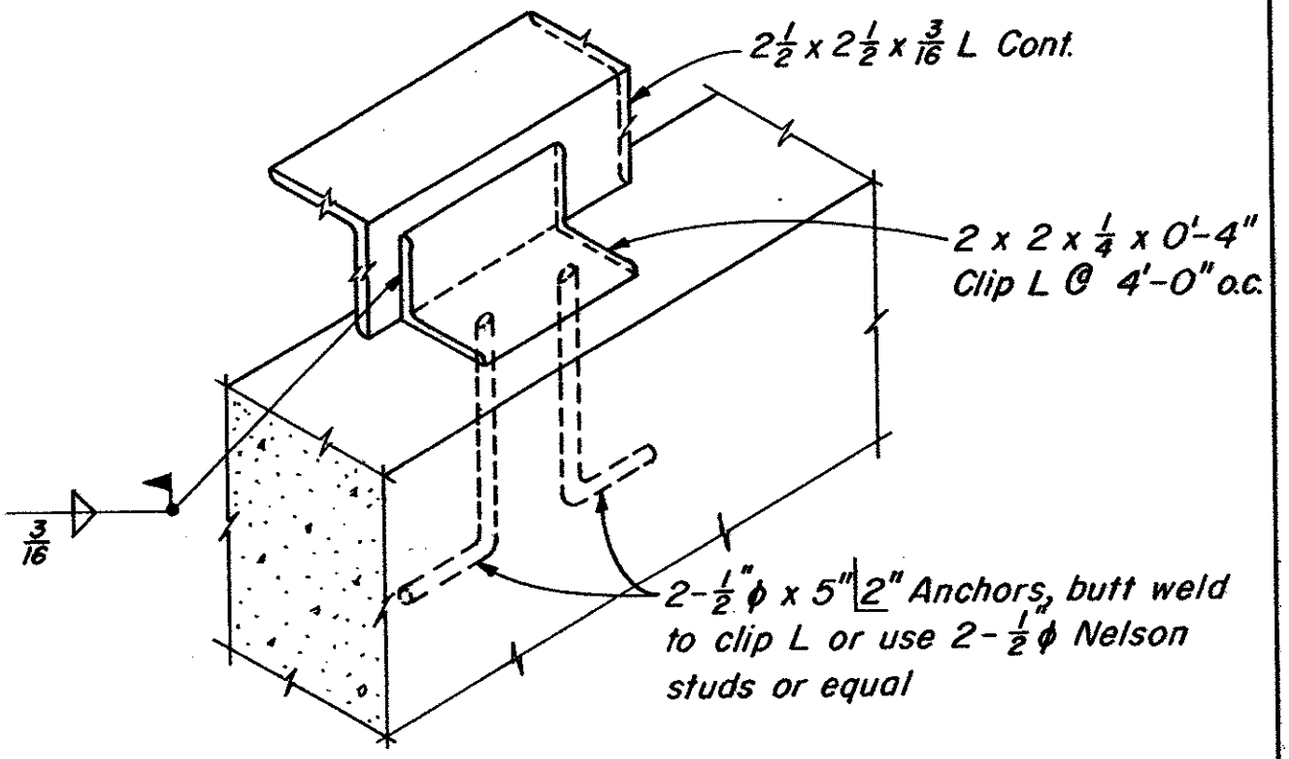

DETAIL "A"

DETAILS OF ROOF CONNECTION AT RAKE

EXHIBIT A-2-45

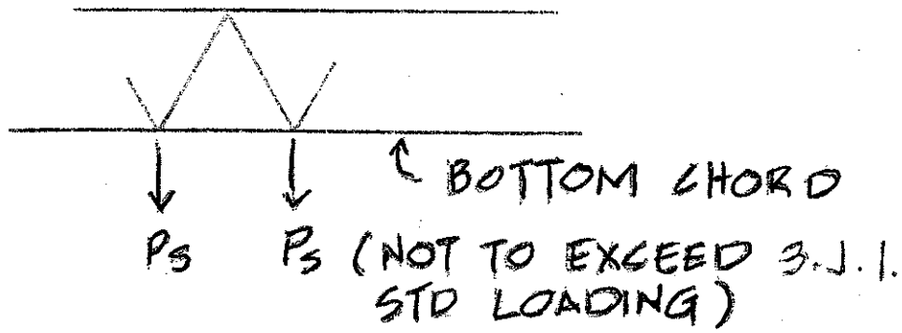

(A) BOTTOM CHORD LOADING ACCORDING TO S.J.I.

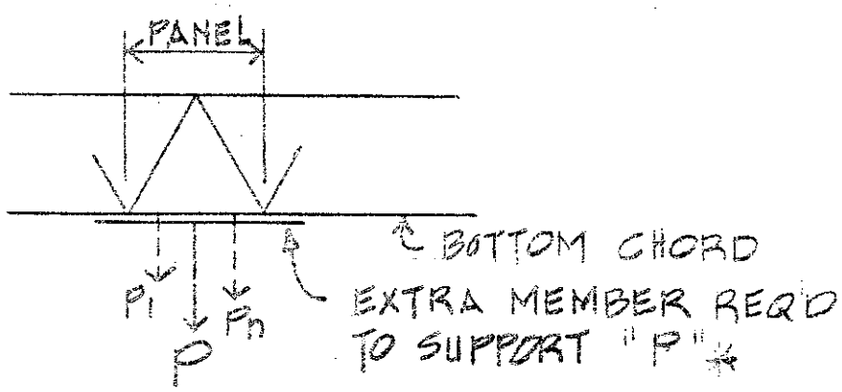

(B) BOTTOM CHORD NOT COVERED BY S.J.I.

* "P" IS THE RESULTANT FORCE APPLIED AT MID-SPAN OF JOIST PANEL. "P" IS THE EXCESS LOAD ABOVE 50 LBS, BUT MUST NOT EXCEED LOADING (A) ABOVE. LOADS INCLUDE CEILING†, MECH EQUIPMENT AND ELECTRICAL EQUIPMENT AMONG OTHERS.

† FOR STANDARD HANGER SPCQ (12 SQ FT. AREA) PLASTER CEILINGS ARE CONSIDERED TO WEIGH 10 PSF × 12 SQ. FT. = 120 LBS. "P" FOR PLASTER CEILING = 120 - 50 = 70 LBS.

STEEL JOIST LOADING DETAIL

EXHIBIT A-2-46

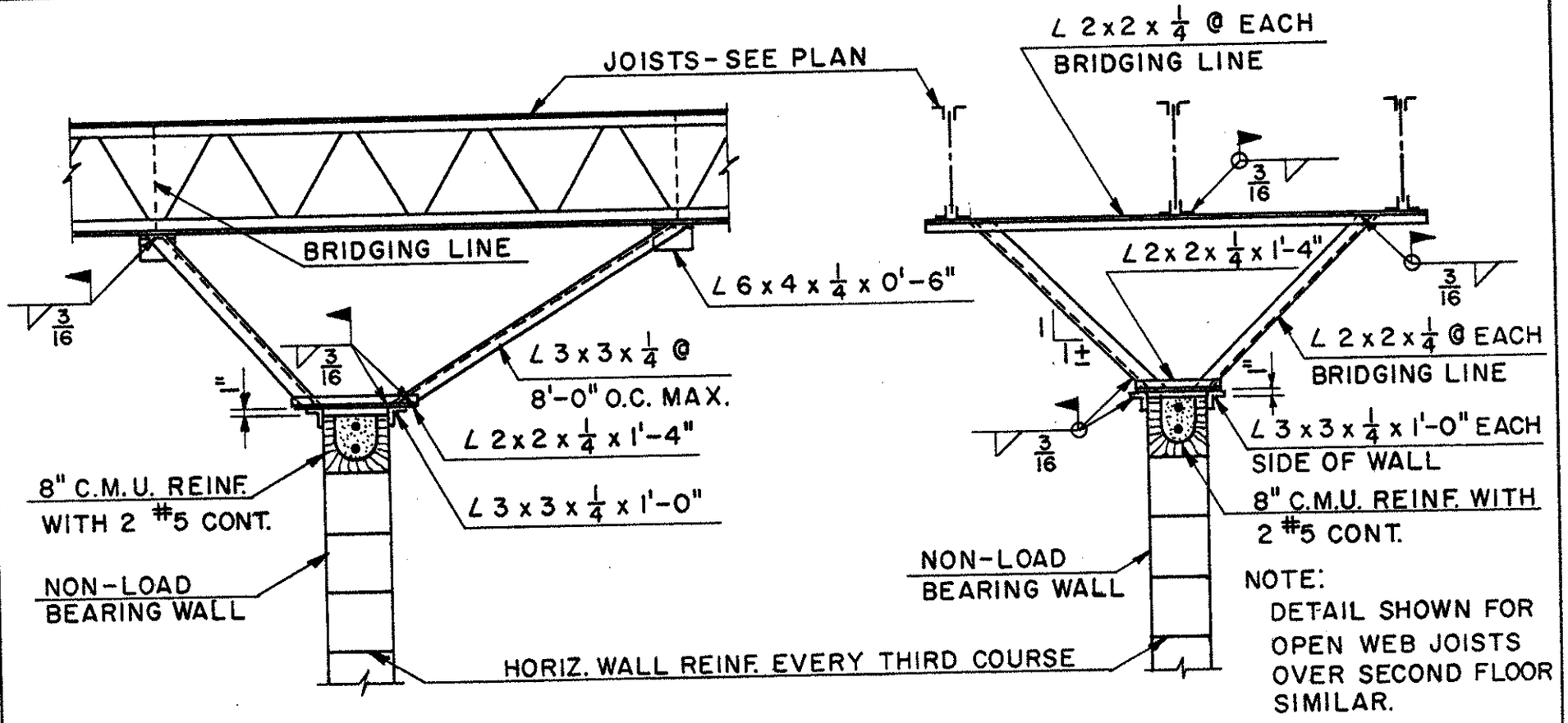

TYPICAL DETAIL FOR ALL INTERIOR NON-LOAD BEARING PARTITIONS NOT EXTENDING TO BOTTOM OF DECK

EXHIBIT A-2-49

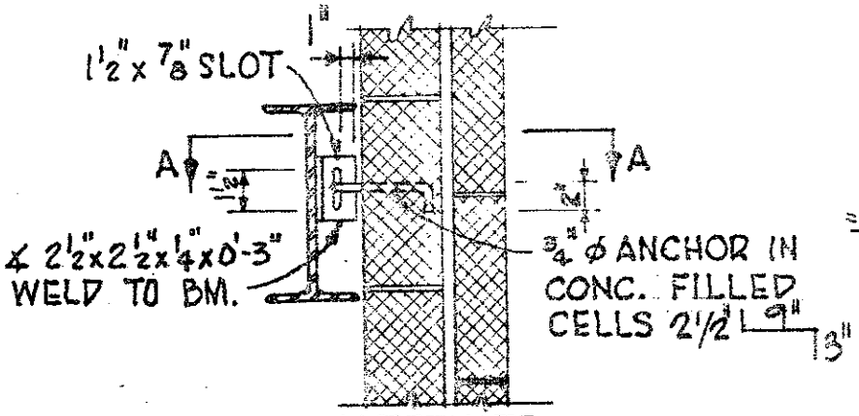

ALTERNATE *
WALL ANCHOR
TO STEEL BEAM

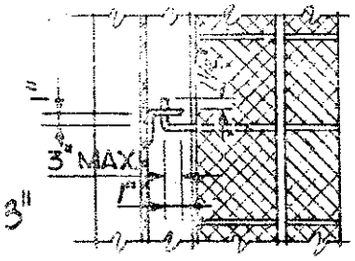

SECTION A-A

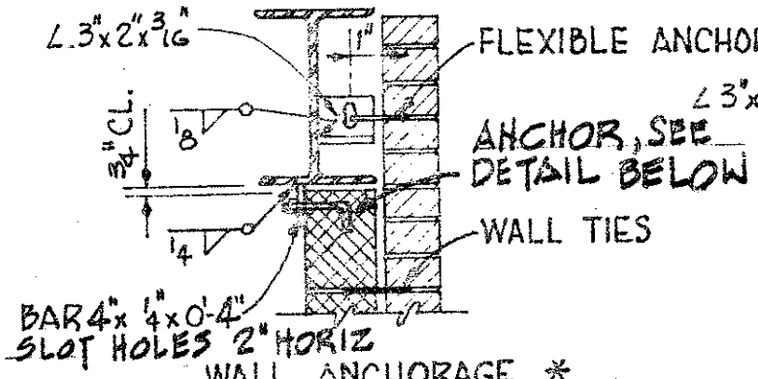

WALL ANCHORAGE *
TO STEEL BEAM

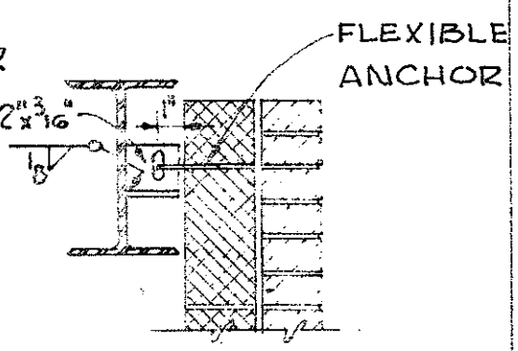

WALL ANCHORAGE *
TO STEEL BEAM

NOTE:
TIES TO BEAM REQUIRED ONLY
WHEN TIES TO COLUMN ARE OMITTED
* 2'-0" SPACING FOR EXTERIOR WALLS
4'-0" SPACING FOR INTERIOR WALLS

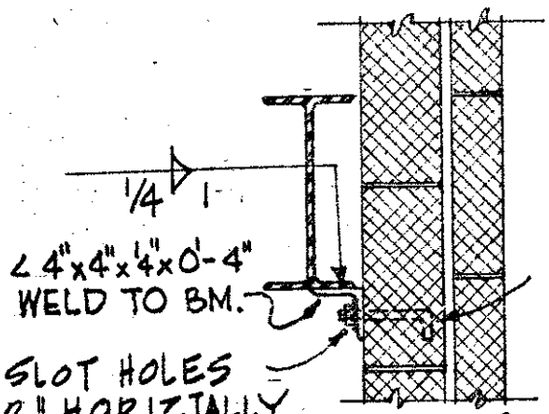

3/4" ϕ ANCHOR IN CONC.
FILLED CELLS WITH
NUT & WASHER
(HAND TIGHTEN
NUT ONLY)

PREFERRED
WALL ANCHOR
TO STEEL BEAM

USED IN SEISMIC ZONES
AND FOR HIGH LOSS
POTENTIAL BUILDINGS

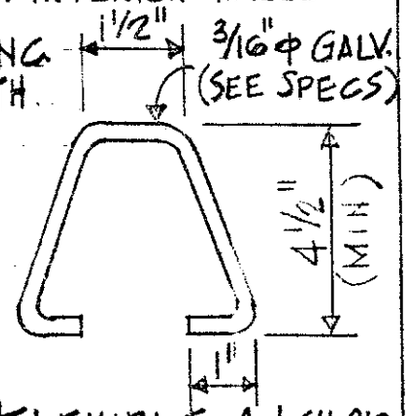

FLEXIBLE ANCHOR
LOAD CAP. OF EACH
ANCHOR = 600 LBS.

WALL TIES TO STEEL BEAM

EXHIBIT A-2-50

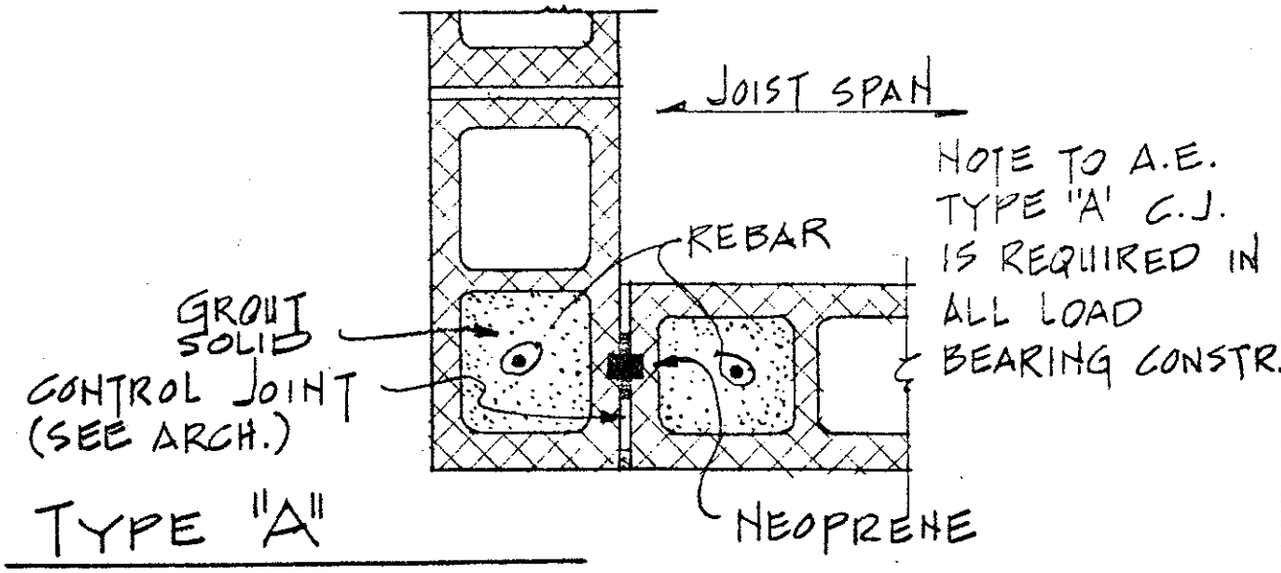

TYPE "A"

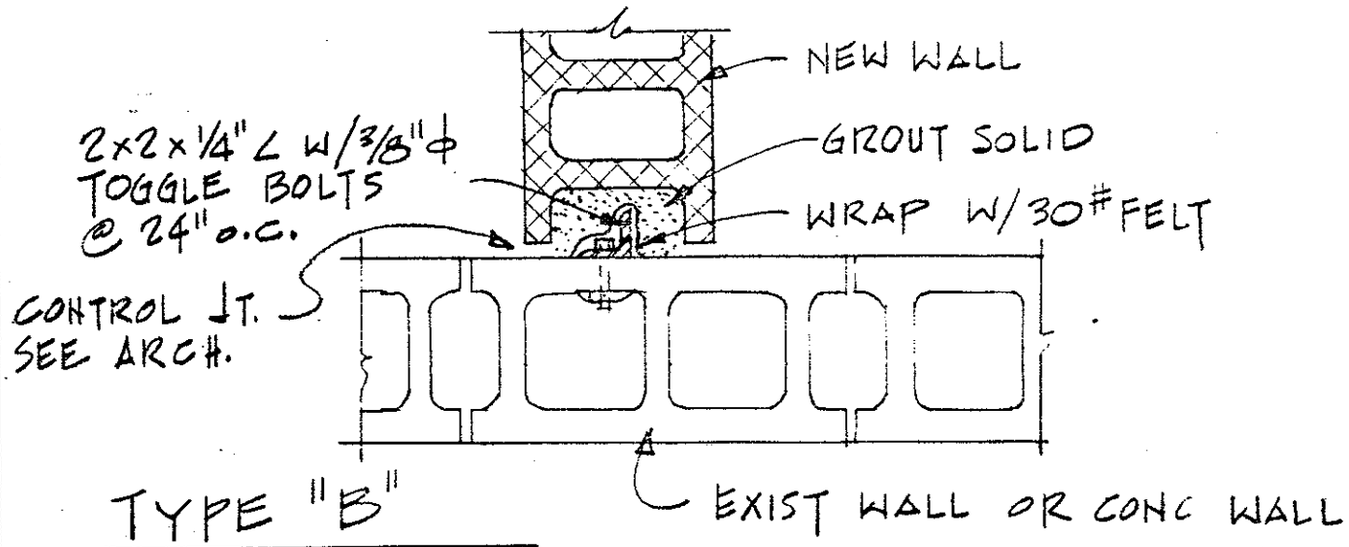

TYPE "B"

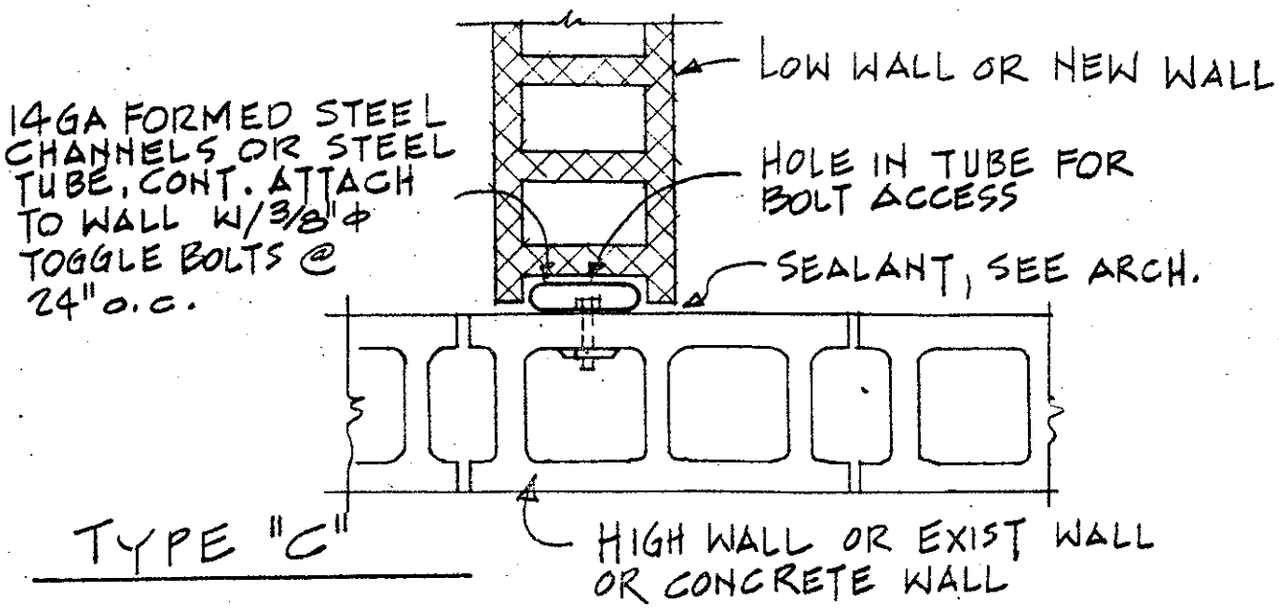

TYPE "C"

SPECIAL CONTROL JOINT DETAILS

EXHIBIT A-2-52

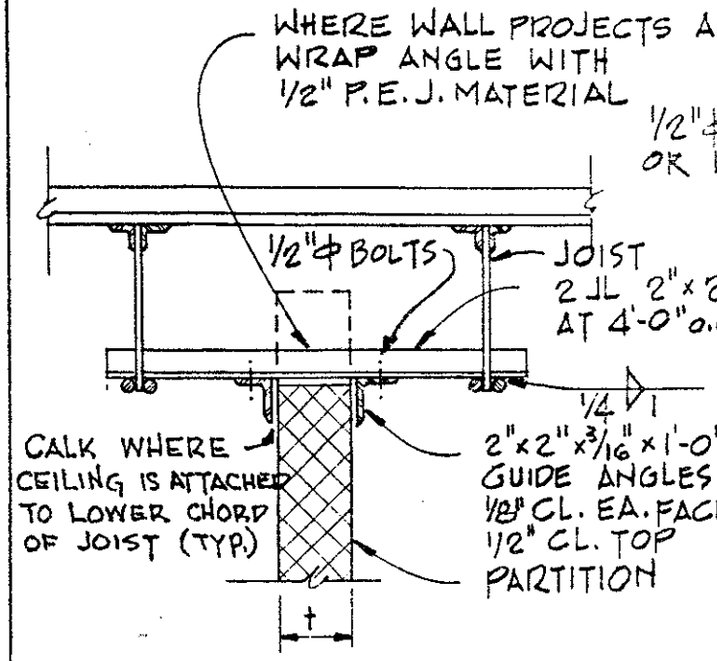

WITH STRUCTURAL STEEL JOIST

FOR ALL SEISMIC AREAS

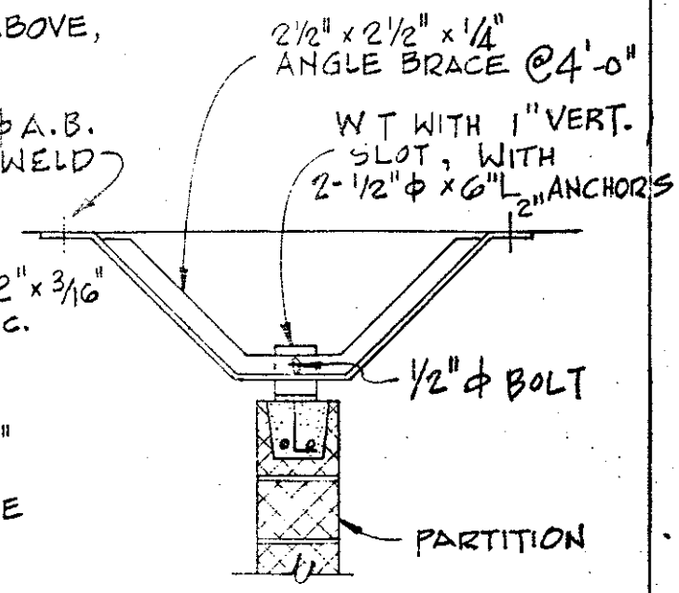

ALTERNATE SUPPORT OVER SUPPORTED FLOOR

(FOR ALL SEISMIC AREAS)

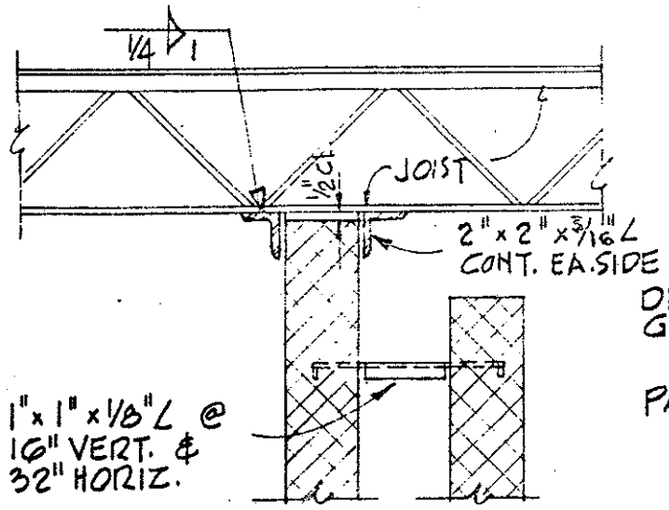

CHASE PARTITION

FOR ALL SEISMIC AREAS

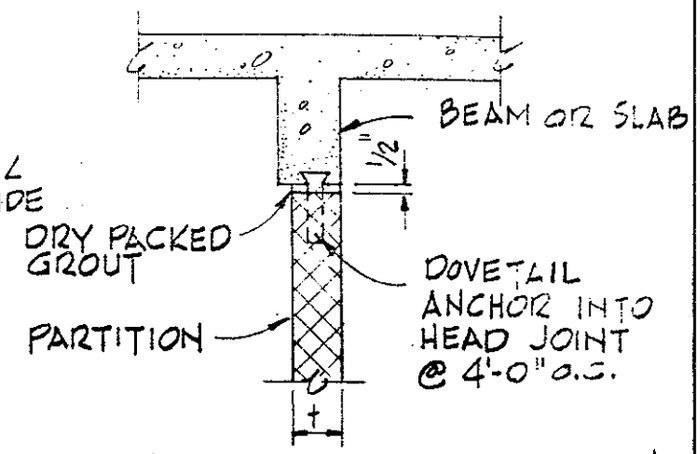

(NOT FOR SEISMIC ZONES 2 & 3

WITH CONCRETE BEAM OR SLAB

TYPICAL DETAILS OF INTERIOR PARTITIONS

SUPPORT AT TOP OF WALL WHEN DISTANCE BETWEEN LATERAL SUPPORTS EXCEED 36" t"

EXHIBIT A-2-53

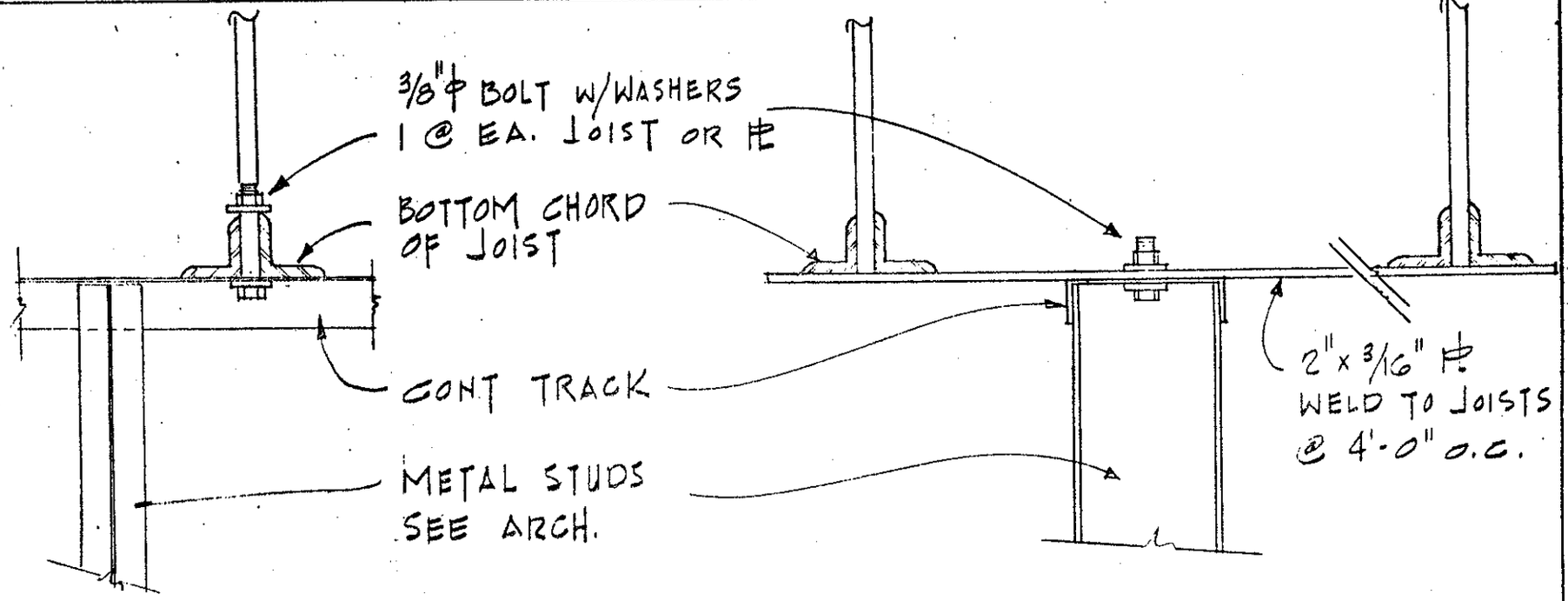

PERPENDICULAR TO JOISTS

PARALLEL TO JOISTS

INTERIOR METAL STUD PARTITION SUPPORT DETAILS

(FOR PARTITIONS ON SUPPORTED SLABS)

NOTE TO A.E.

PROVIDE PARTITION SUPPORT FOR STUD PARTITION WHERE DISTANCE BETWEEN CROSS WALLS EXCEED 8'-0"; AND IF CEILINGS ARE DISCONTINUOUS OR WHERE CEILING HEIGHT IS EXCESSIVE. LATERAL DESIGN LOAD IS 10 PSF.

EXHIBIT A-2-54

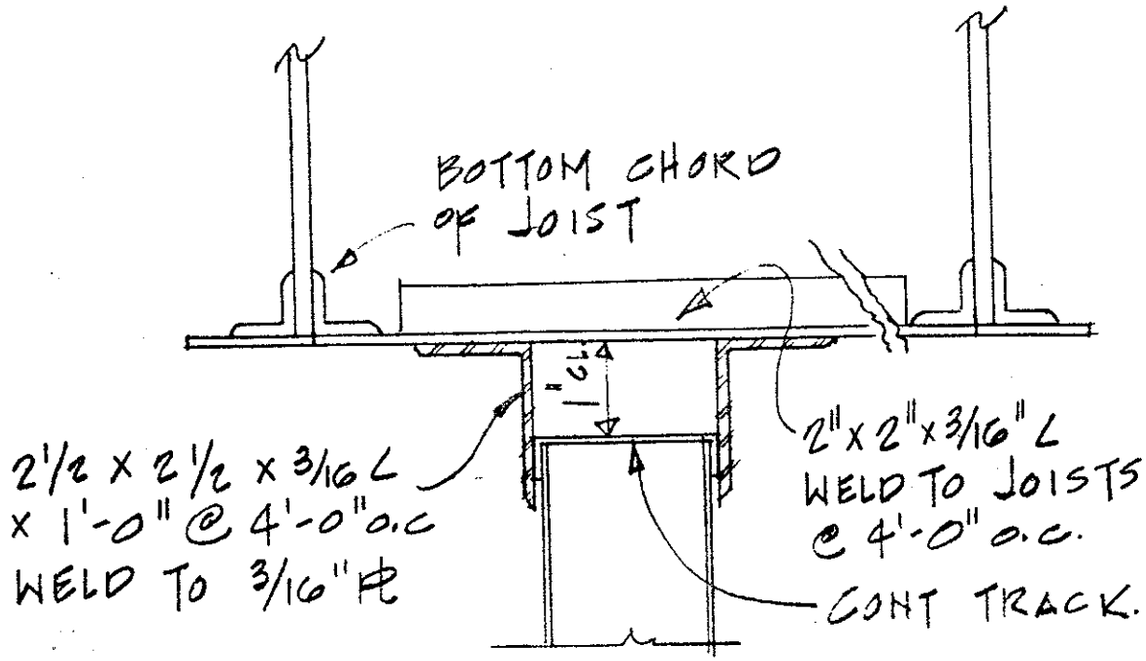

PARALLEL TO JOISTS

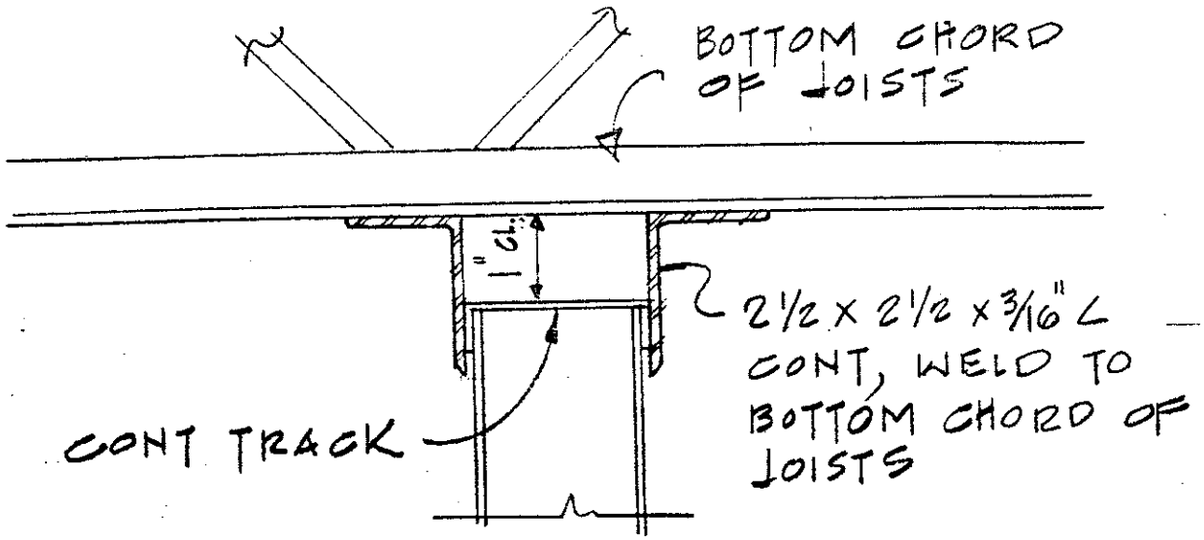

PERPENDICULAR TO JOISTS

INTERIOR METAL STUD PARTITION SUPPORT DETAILS (SEE NOTE TO A.E. PL 54).
(FOR PARTITIONS ON "SLAB ON GRADE")

EXHIBIT A-2-55

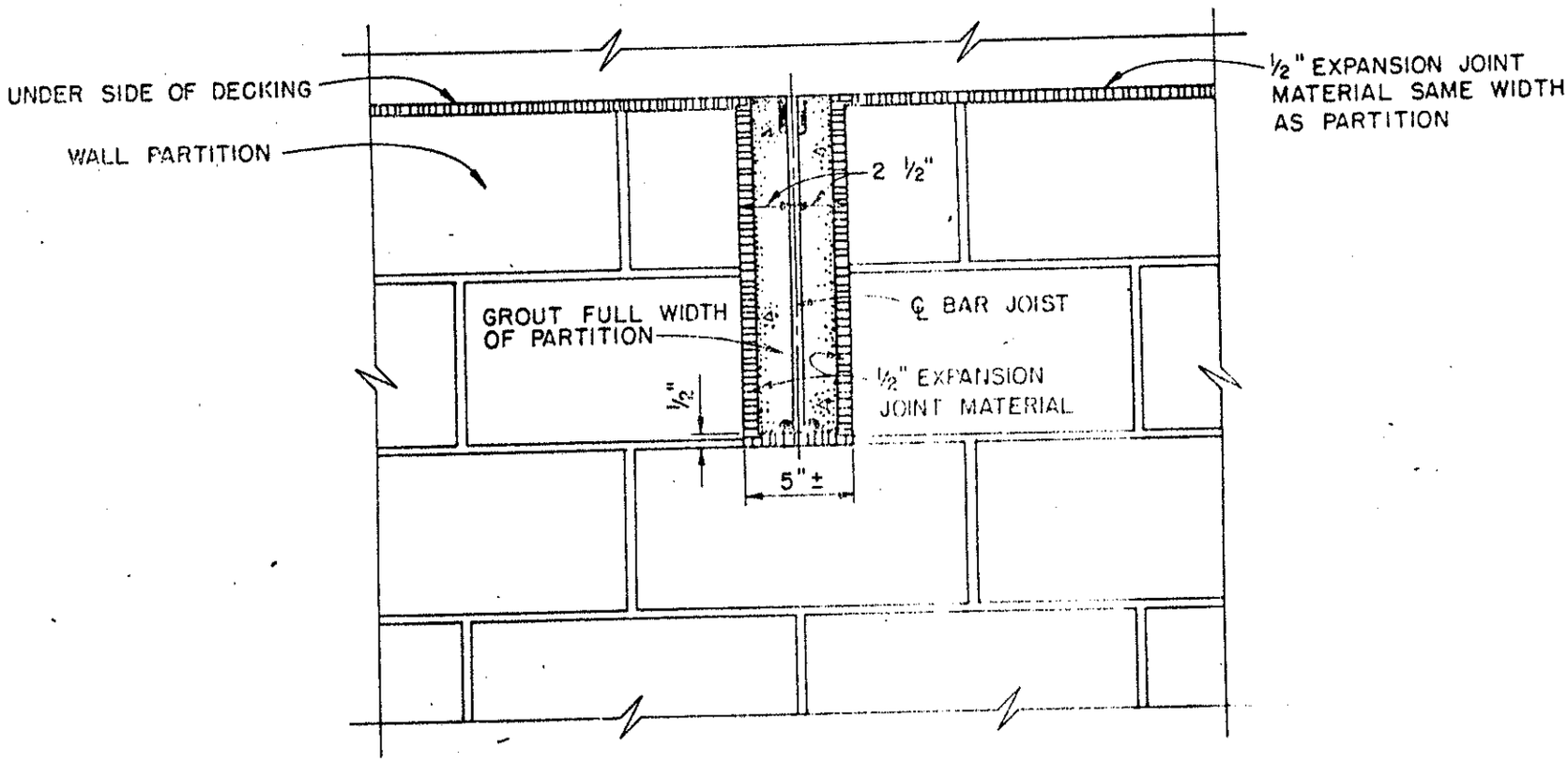

DETAIL OF INTERSECTION OF BAR JOIST AND PARTITION TO UNDERSIDE OF DECK

SCALE: 1 ½" = 1'-0"

EXHIBIT A-2-57

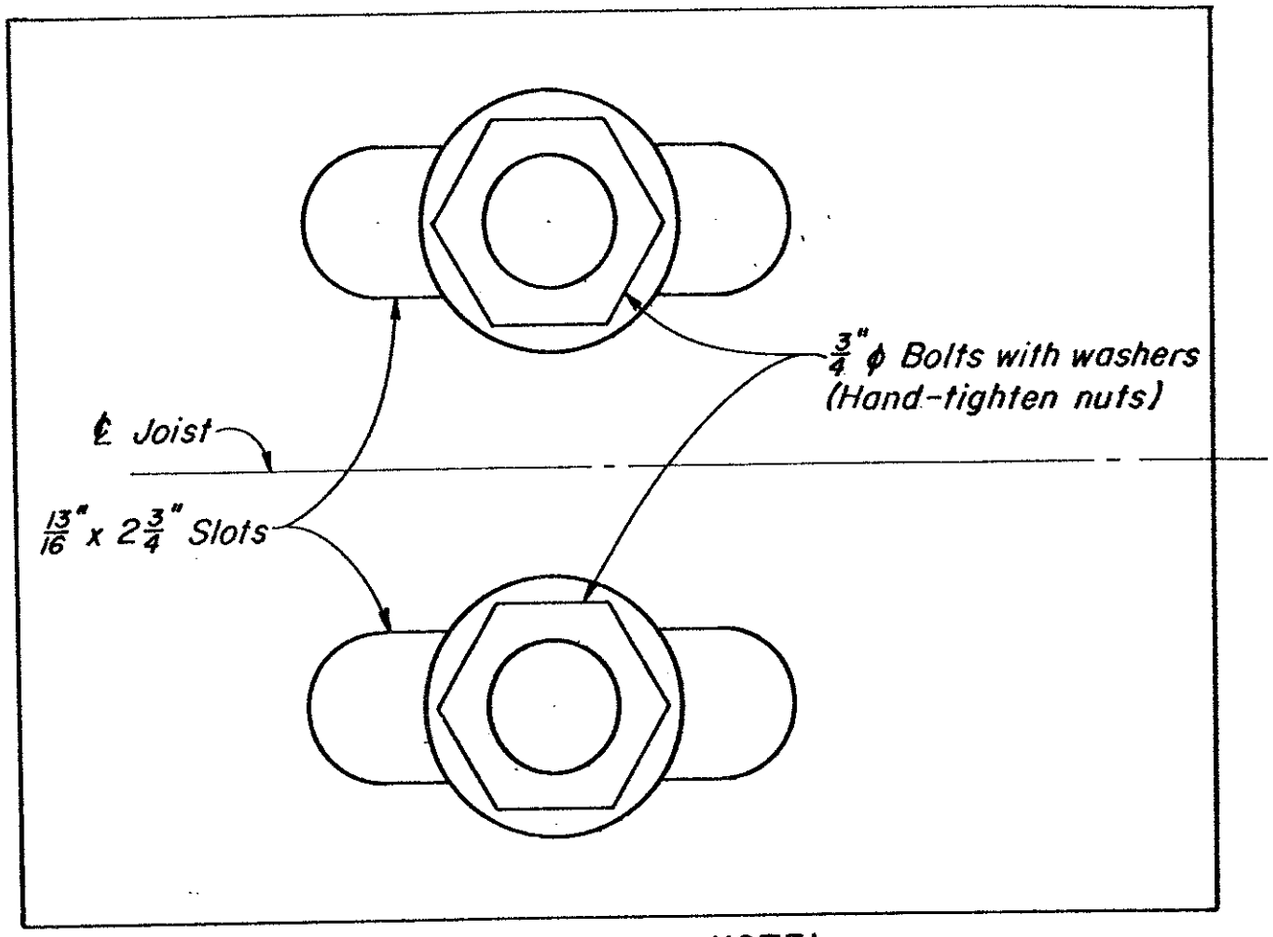

PLAN

NOTE:
Other end of joist at exterior wall shall be fixed connection. Alternate expansion connections on every other end of joists at exterior wall, thus:

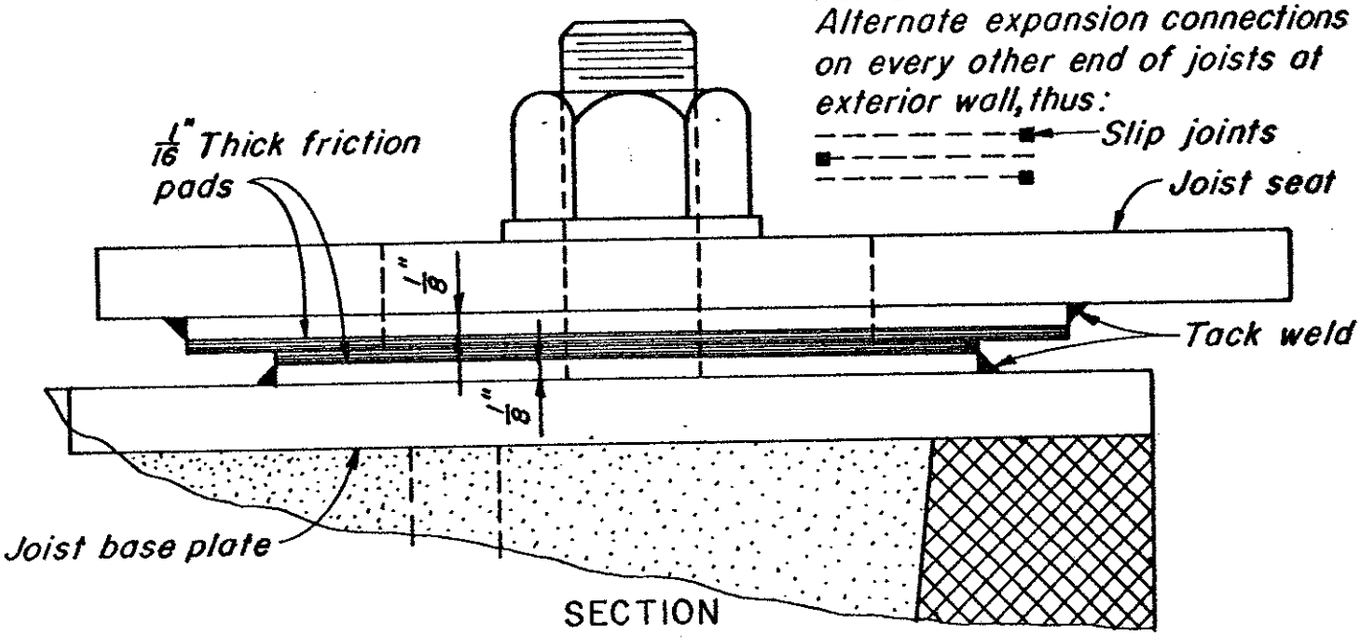

SECTION

EXPANSION CONNECTION OF JOIST SEAT
FOR LONG JOIST SPANS-60' OR MORE

EXHIBIT A-2-61

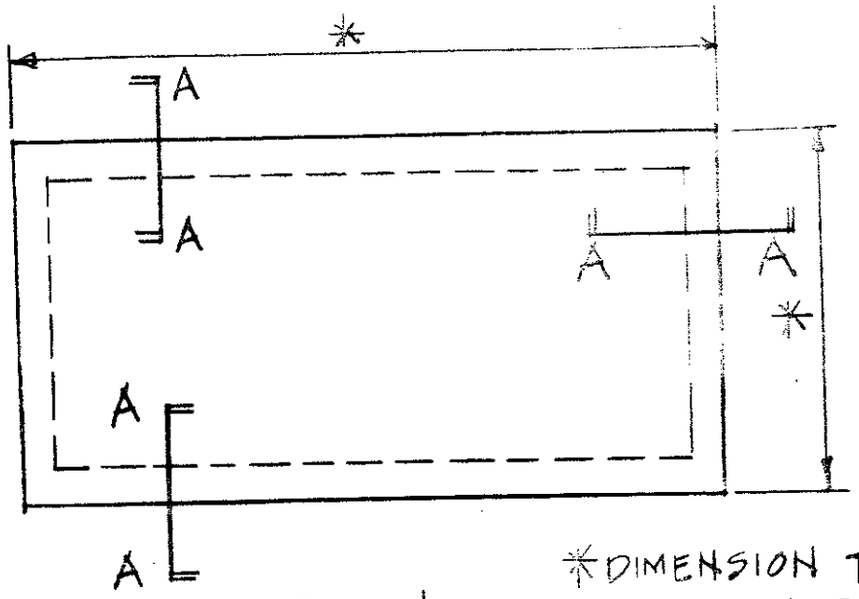

PLAN

*DIMENSION TO BE DETERMINED BY SIZE OF CONDENSER.

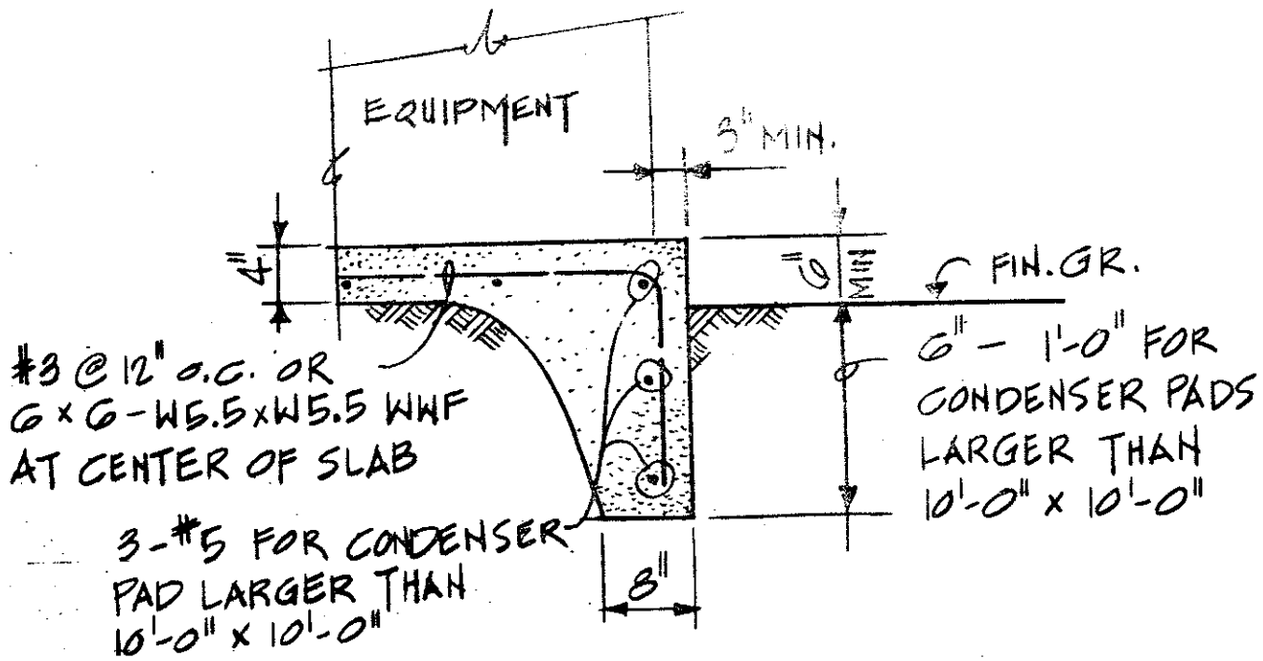

SECTION "A-A"

CONDENSER FOUNDATION DETAILS

EXHIBIT A-2-63

FOR INFORMATION ONLY:
Coordinate use w/Elec Engr

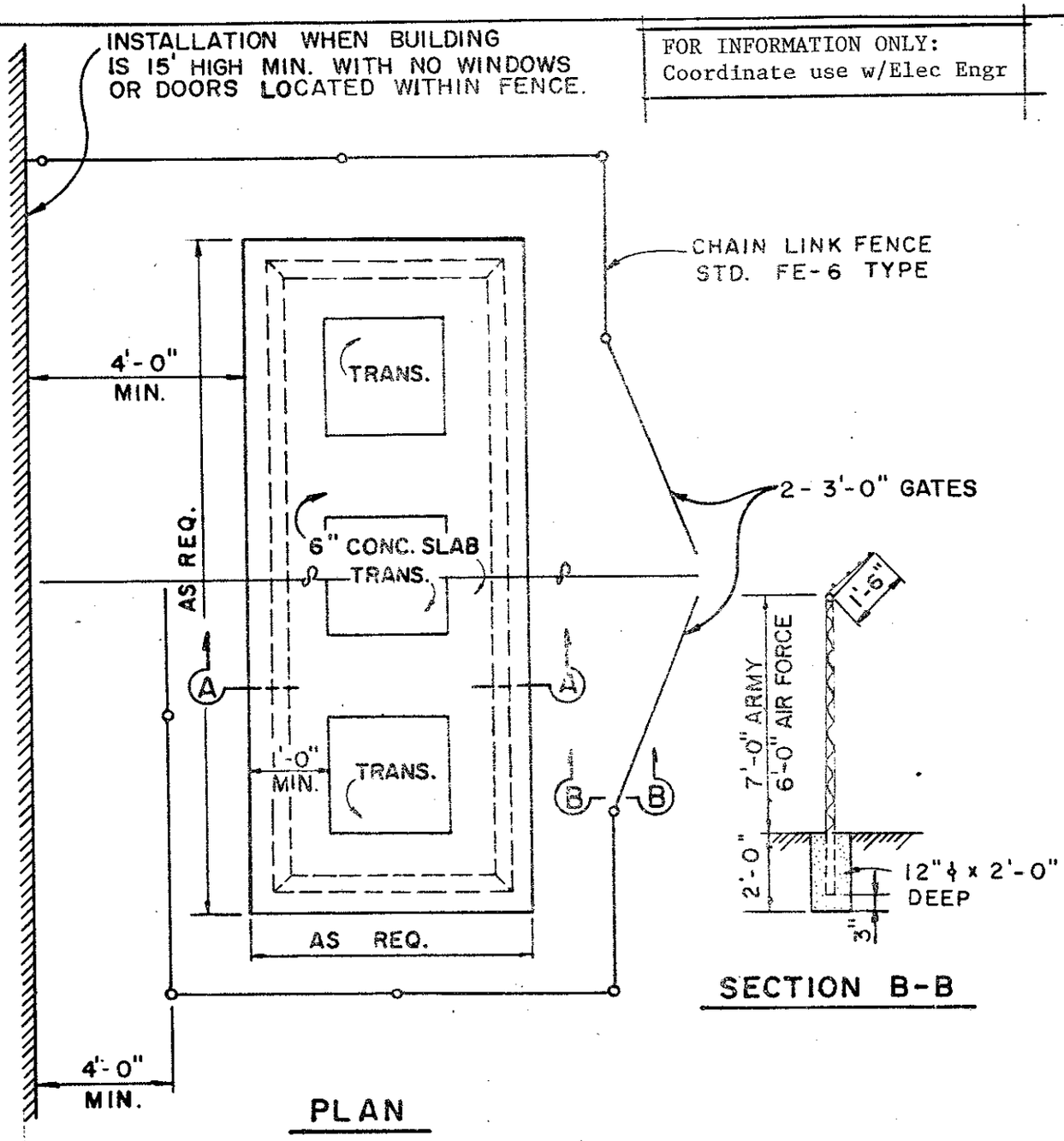

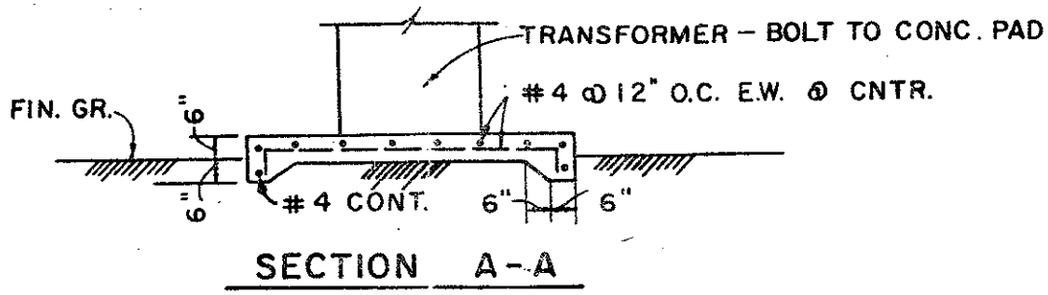

STANDARD CONCRETE TRANSFORMER PAD DETAILS

EXHIBIT A-2-64

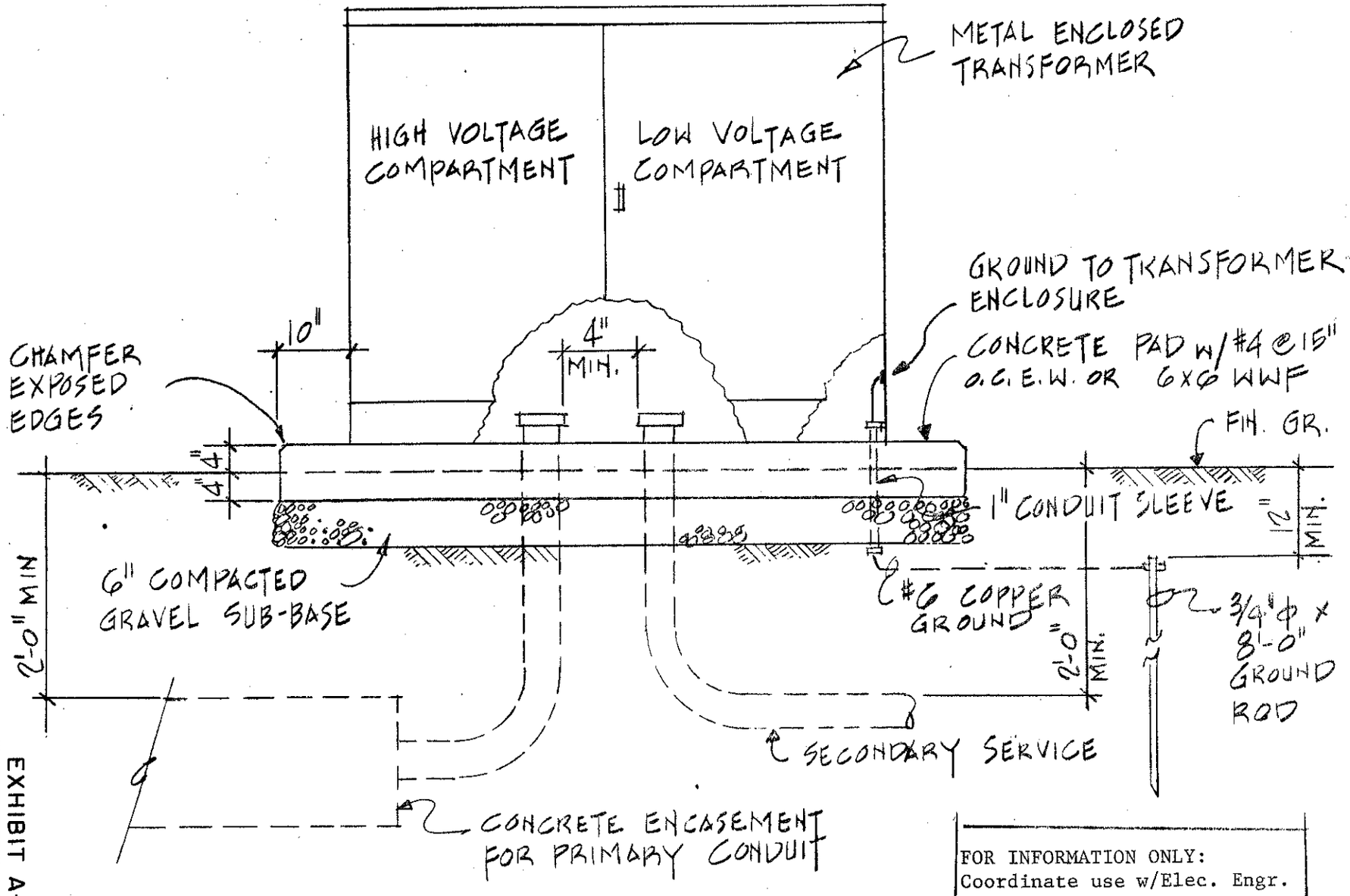

FOR INFORMATION ONLY:
Coordinate use w/Elec. Engr.

TRANSFORMER PAD DETAIL

N.T.S.

EXHIBIT A-2-65

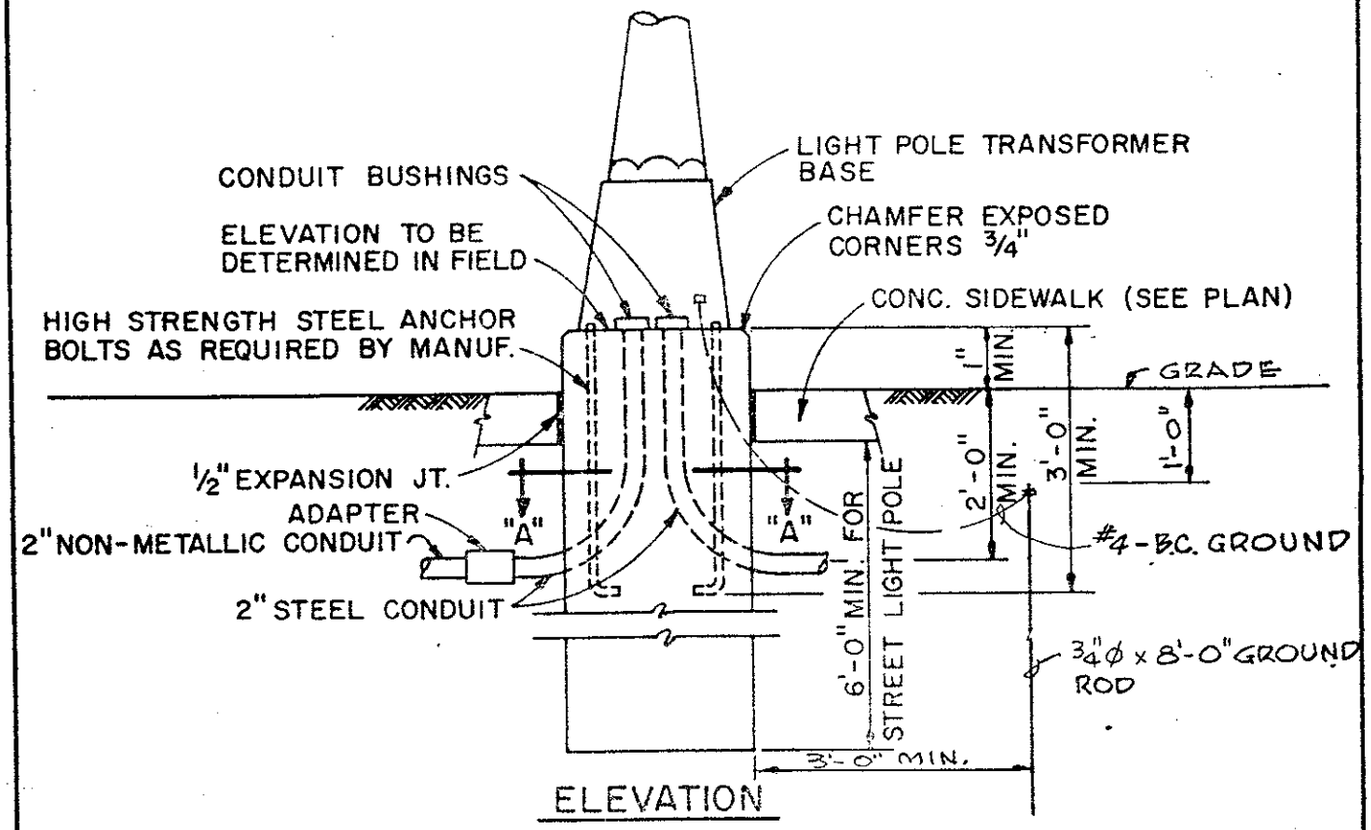

ELEVATION

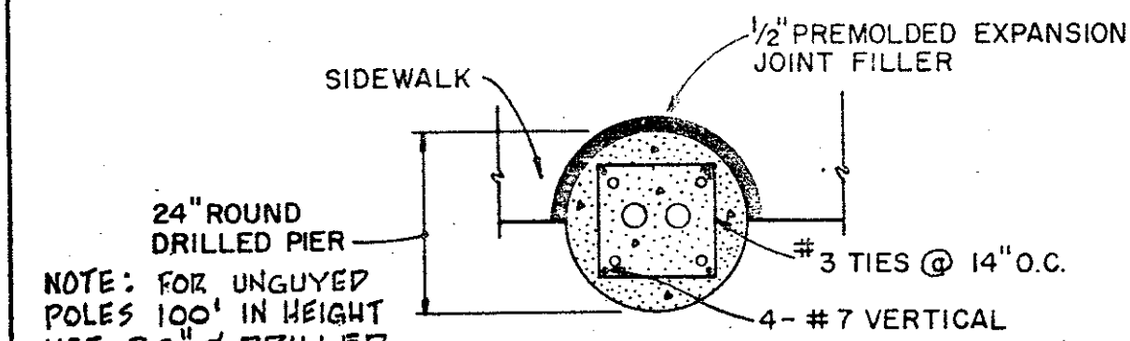

NOTE: FOR UNGUYED POLES 100' IN HEIGHT USE 36"ϕ DRILLED SHAFT 15' IN DEPTH AND REINFORCED WITH 8 #11 AND #3 SPIRALS

SECTION "A-A"

STREET LIGHT POLE BASE

NOT TO SCALE

FOR INFORMATION ONLY:
Coordinate use w/Elec. Engr.

EXHIBIT A-2-66

FOR INFORMATION ONLY:
Coordinate use w/Elec. Engr.

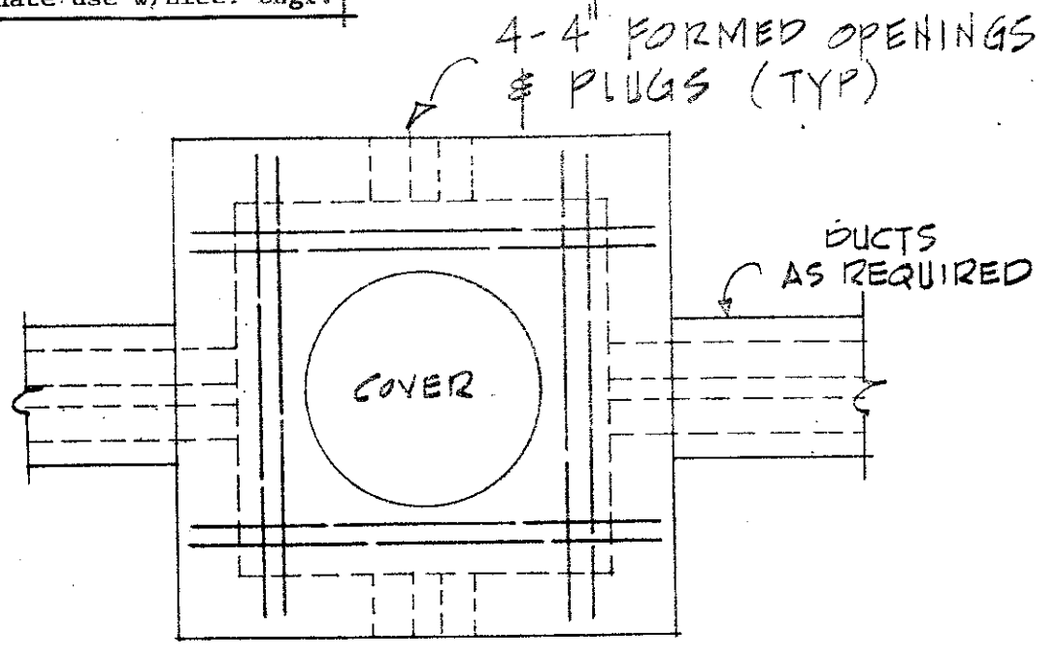

PLAN

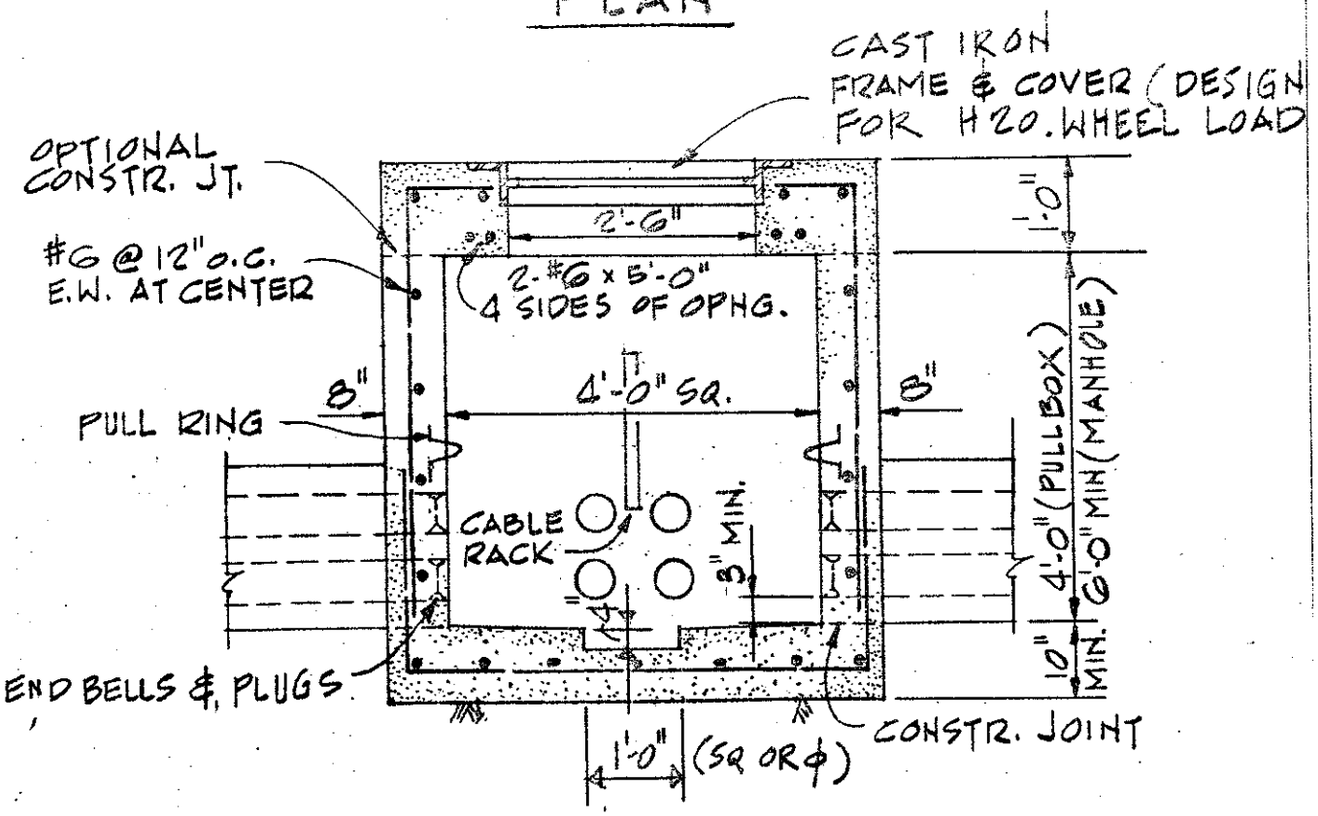

SECTION

ELECTRICAL PULLBOX & MANHOLE DETAILS

N.T.S. (H20 WHEEL LOAD)

EXHIBIT A-2-67

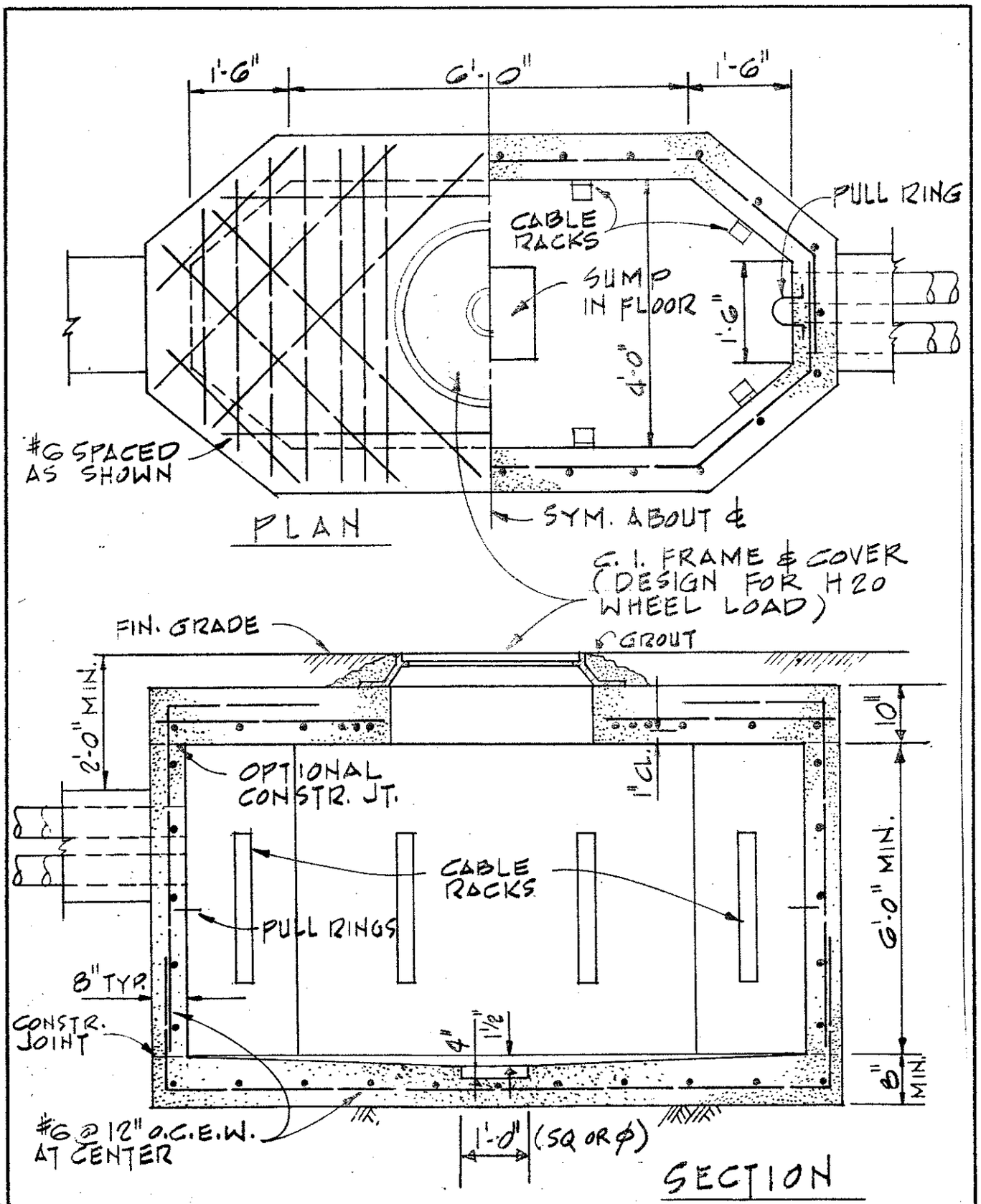

COMMUNICATIONS MANHOLE (H20 WHEEL LOAD)

H.T.S.

FOR INFORMATION ONLY:
Coordinate use w/Elec. Engr.

EXHIBIT A-2-68

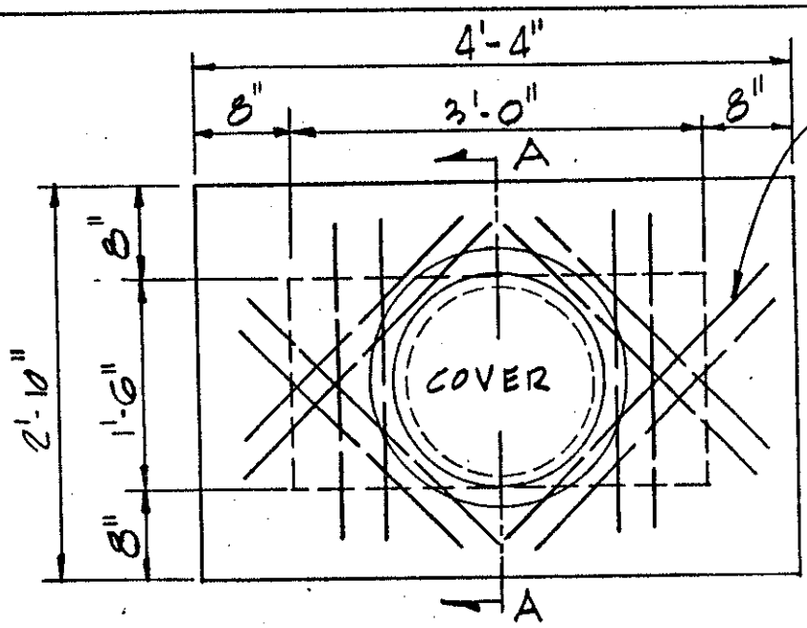

PLAN

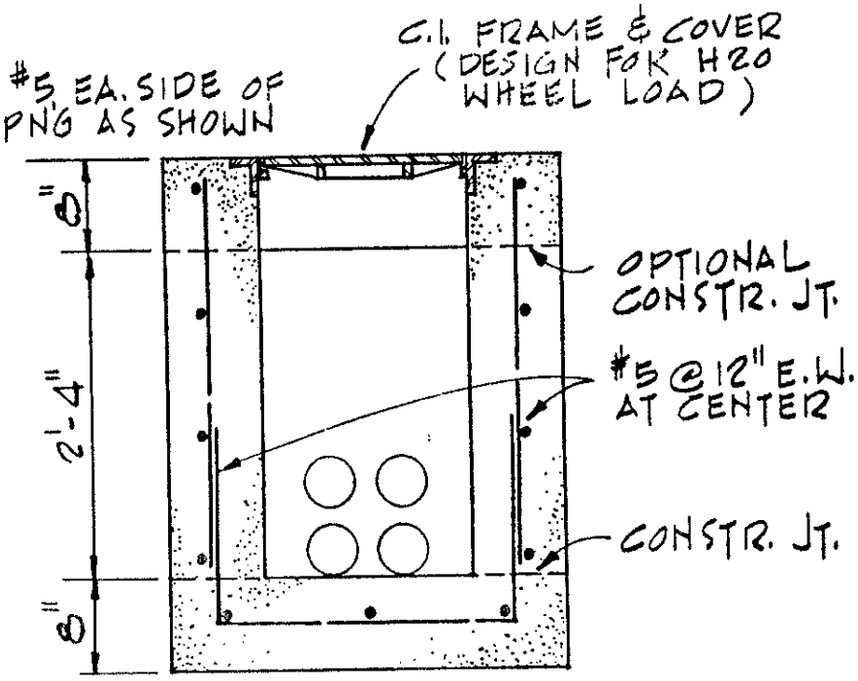

SECTION "A-A"

FOR INFORMATION ONLY -
Coordinate use w/Elec. Engr.

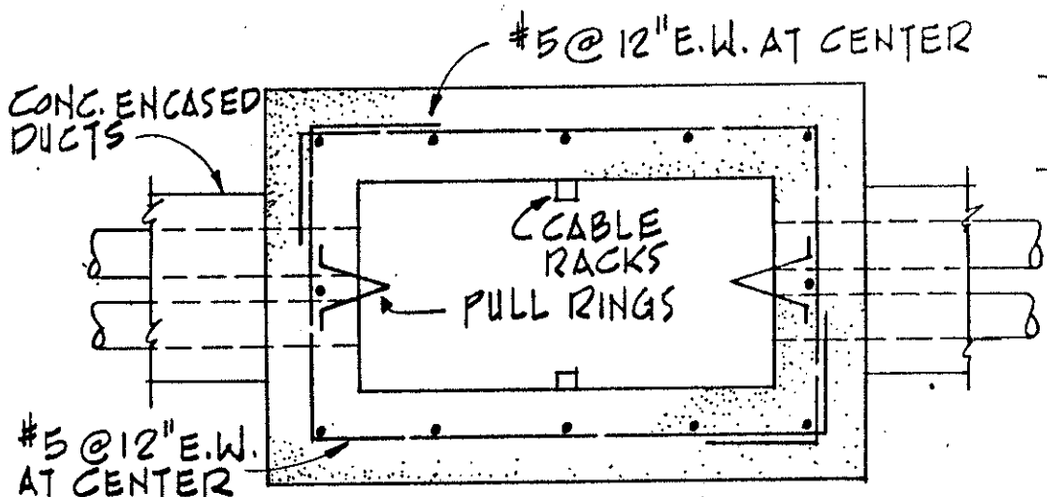

SECTIONAL PLAN

ELECTRICAL HANDHOLE DETAILS

SCALE 3/4" = 1'-0"

H20 WHEEL LOAD

EXHIBIT A-2-69

FOR INFORMATION ONLY: Coordinate use w/Site Development Engr.

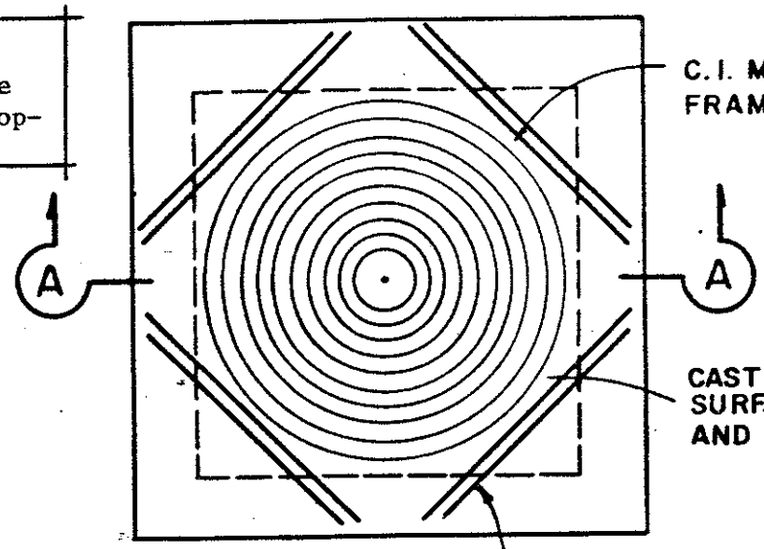

C.I. MANHOLE FRAME AND COVER

CAST IRON SURFACE INLET FRAME AND GRATE

EXTRA #4 BARS EA. SIDE OF OPENING

PLAN

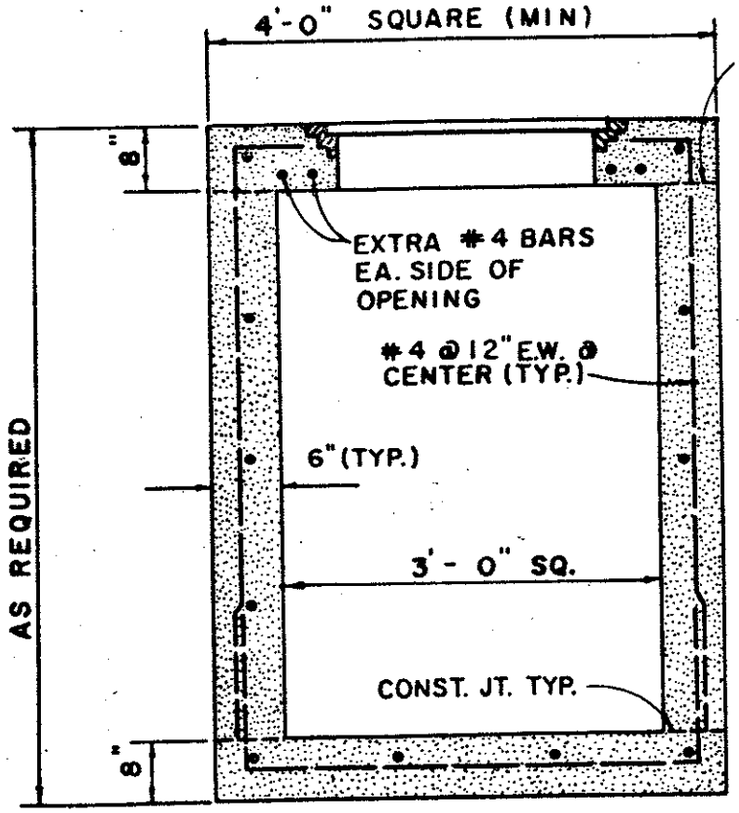

NOTE:

1. USE 3000 psi CONC.
2. HOOP ONE #4 BAR AROUND ALL PIPE OPENINGS
3. ALL LAPS & EXTENSIONS OF REINF. TO BE 30 DIAM.
4. STD. PRE-CAST MANHOLES AND SURFACE INLETS MAY BE USED INSTEAD WHERE ECONOMICAL.

SECTION A-A

STANDARD MANHOLE & SURFACE INLET DETAIL

BUILDING AREAS NOT SUBJECT TO TRAFFIC

EXHIBIT A-2-70

FOR INFORMATION ONLY: Coordinate use w/Site Development Engr.

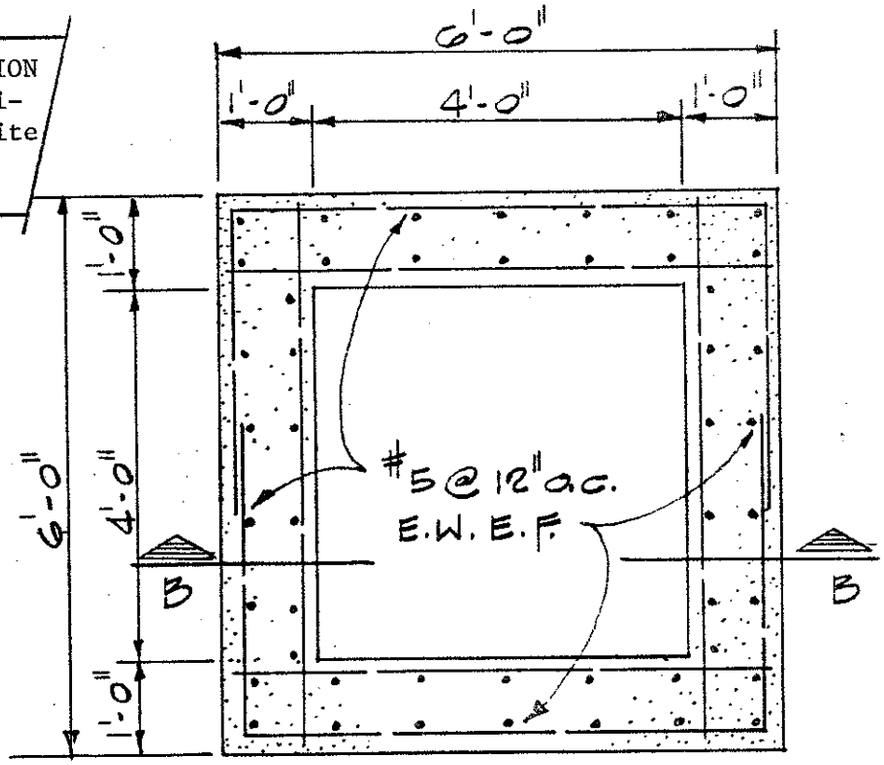

SECTION "A-A"

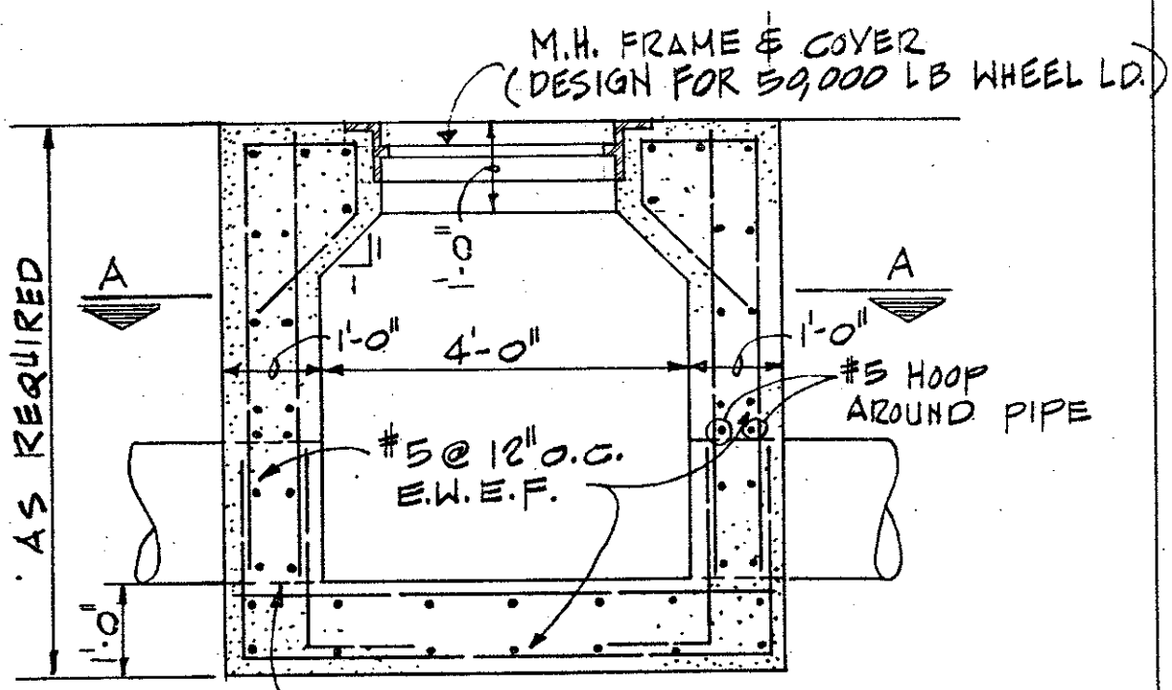

SECTION "B-B"

STANDARD MANHOLE

SUBJECT TO AIRCRAFT TRAFFIC (100,000 LB GEAR)

EXHIBIT A-2-71

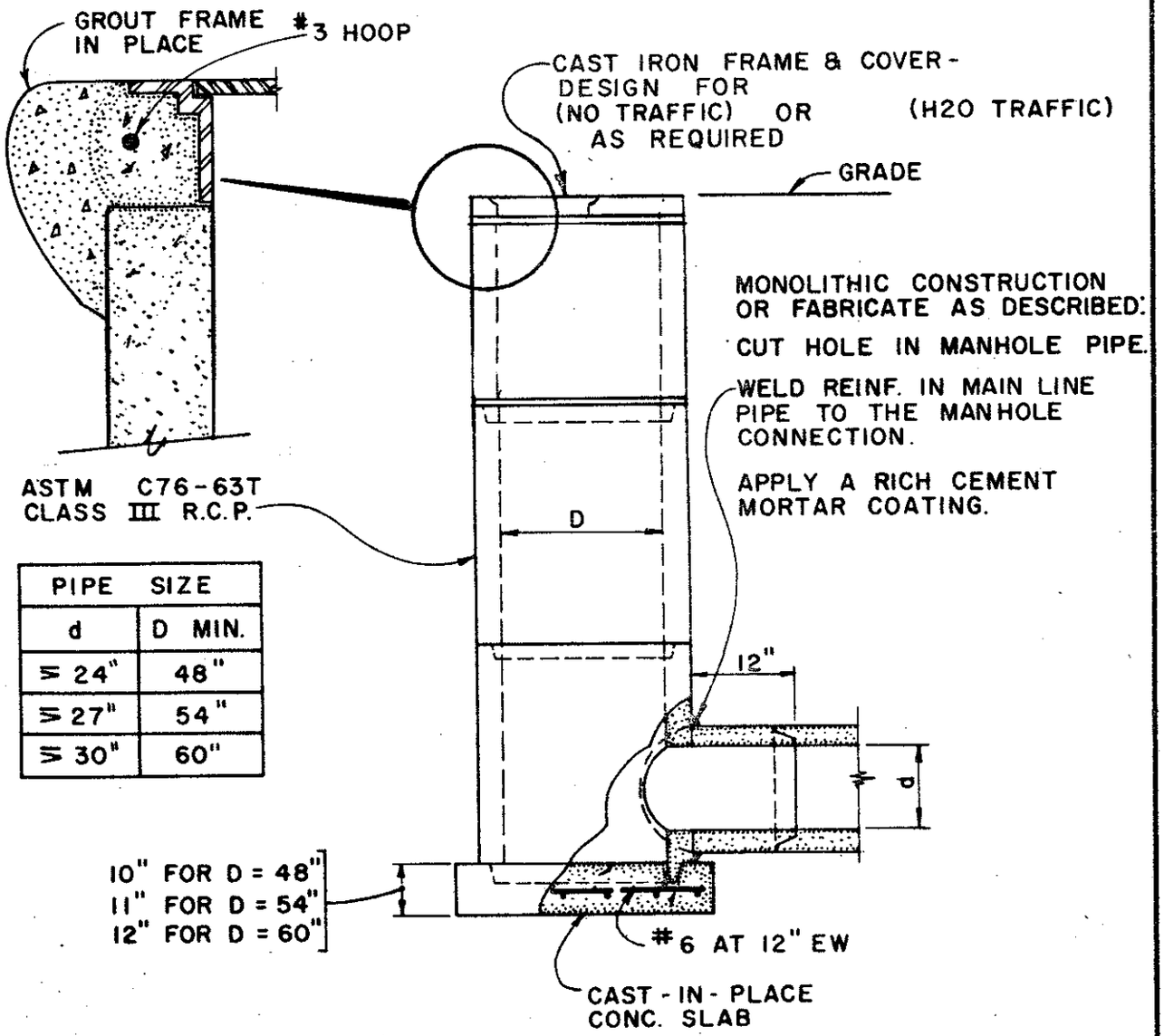

PIPE SIZE	
d	D MIN.
≤ 24"	48"
≤ 27"	54"
≤ 30"	60"

PRE-CAST MANHOLE

FOR INFORMATION ONLY:
Coordinate use w/Site Development Engr.

EXHIBIT A-2-72

Rv.1

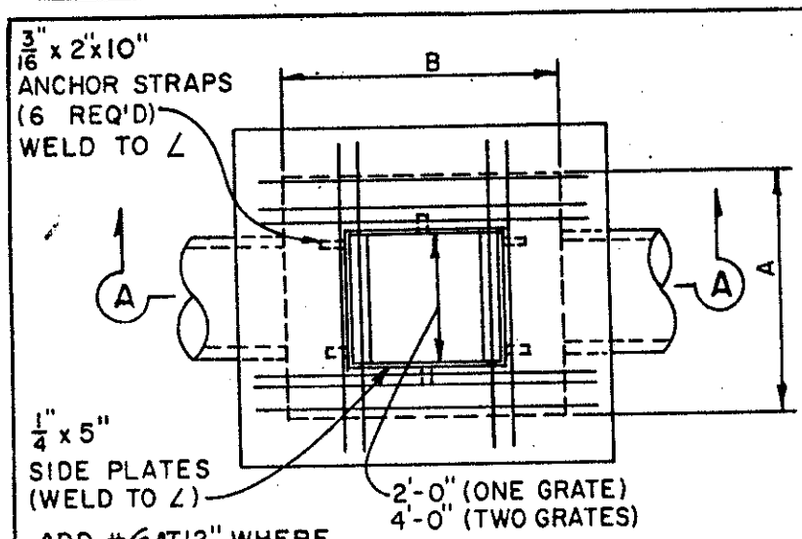

PLAN

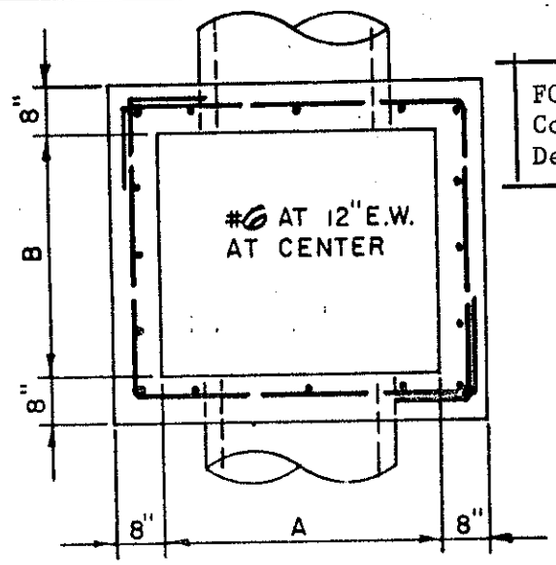

SECTION B-B

FOR INFORMATION ONLY:
Coordinate use w/Site
Development Engr.

DIMENSION SCHED.		
PIPE SIZE	A	B
36" OR LESS	4'-0"	3'-6"
42"	4'-6"	3'-6"
48"	5'-0"	3'-6"
54"	5'-6"	3'-6"
60"	6'-0"	3'-6"
66"	7'-0"	3'-6"
72"	7'-6"	3'-6"
84"	8'-6"	3'-6"

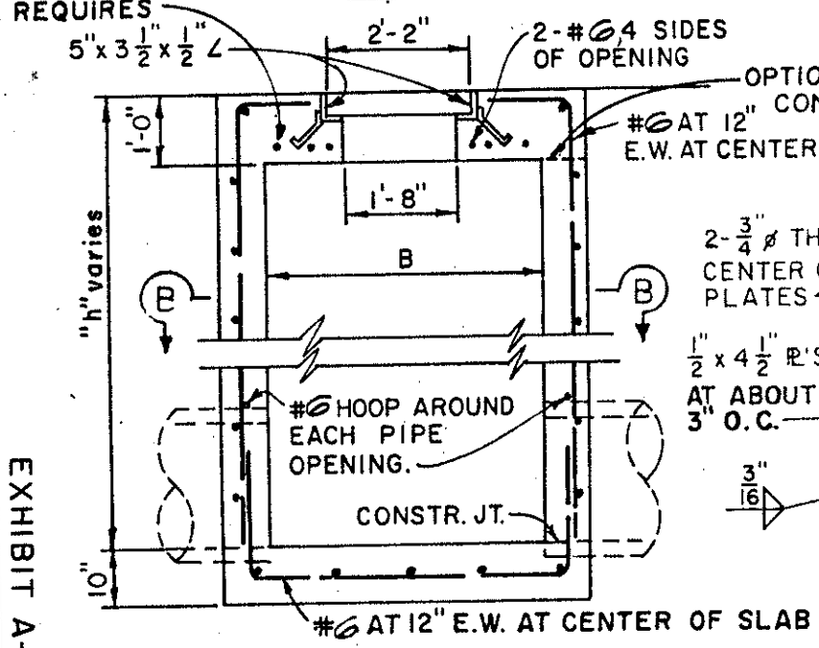

SECTION A-A

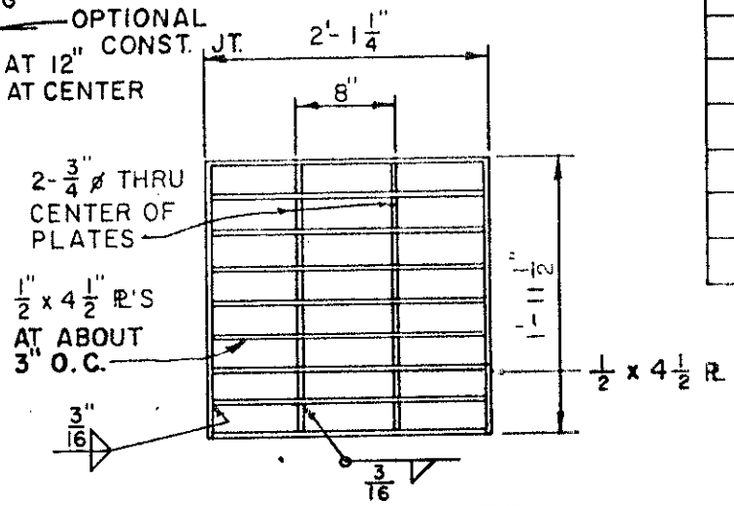

DETAIL-ONE GRATE

STANDARD SURFACE INLET (25K WHEEL LOAD TRAFFIC AREA)

EXHIBIT A-2-73

FOR INFORMATION ONLY - Coordinate use w/Site Development Engr.

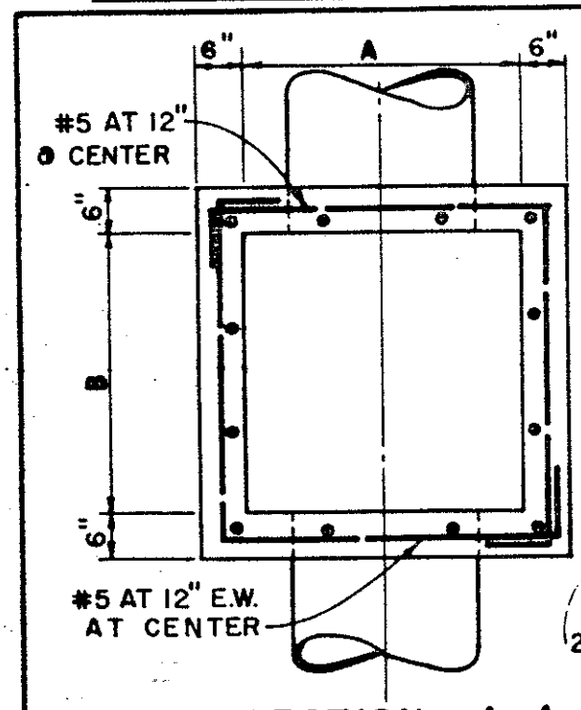

SECTION A-A

SCALE: $\frac{1}{2}$ INCH = 1 FOOT

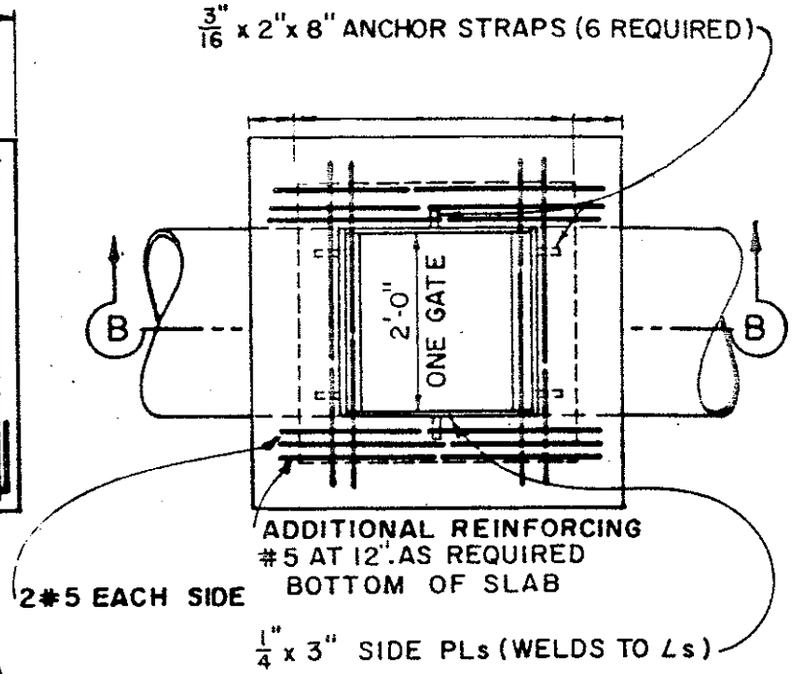

NOTE:
FOR DIMENSIONS A&B SEE PLATE 73.

PLAN

SCALE: $\frac{1}{2}$ INCH = 1 FOOT

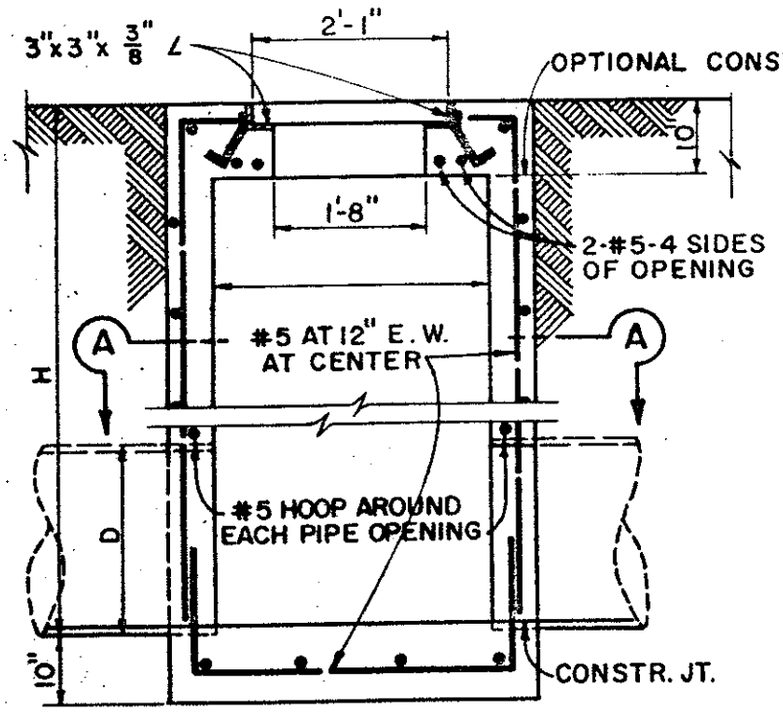

SECTION B-B

SCALE: $\frac{1}{2}$ INCH = 1 FOOT

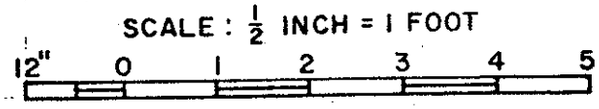

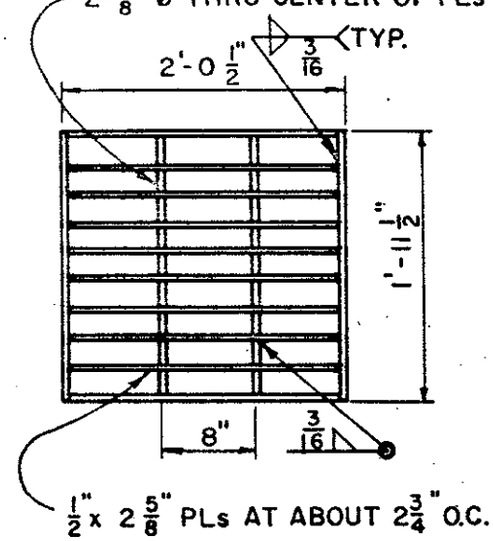

DETAIL-ONE GRATE

SCALE: $\frac{3}{4}$ INCH = 1 FOOT

STANDARD SURFACE INLET DETAIL

9K WHEEL LOADING TRAFFIC AREA

EXHIBIT A-2-74

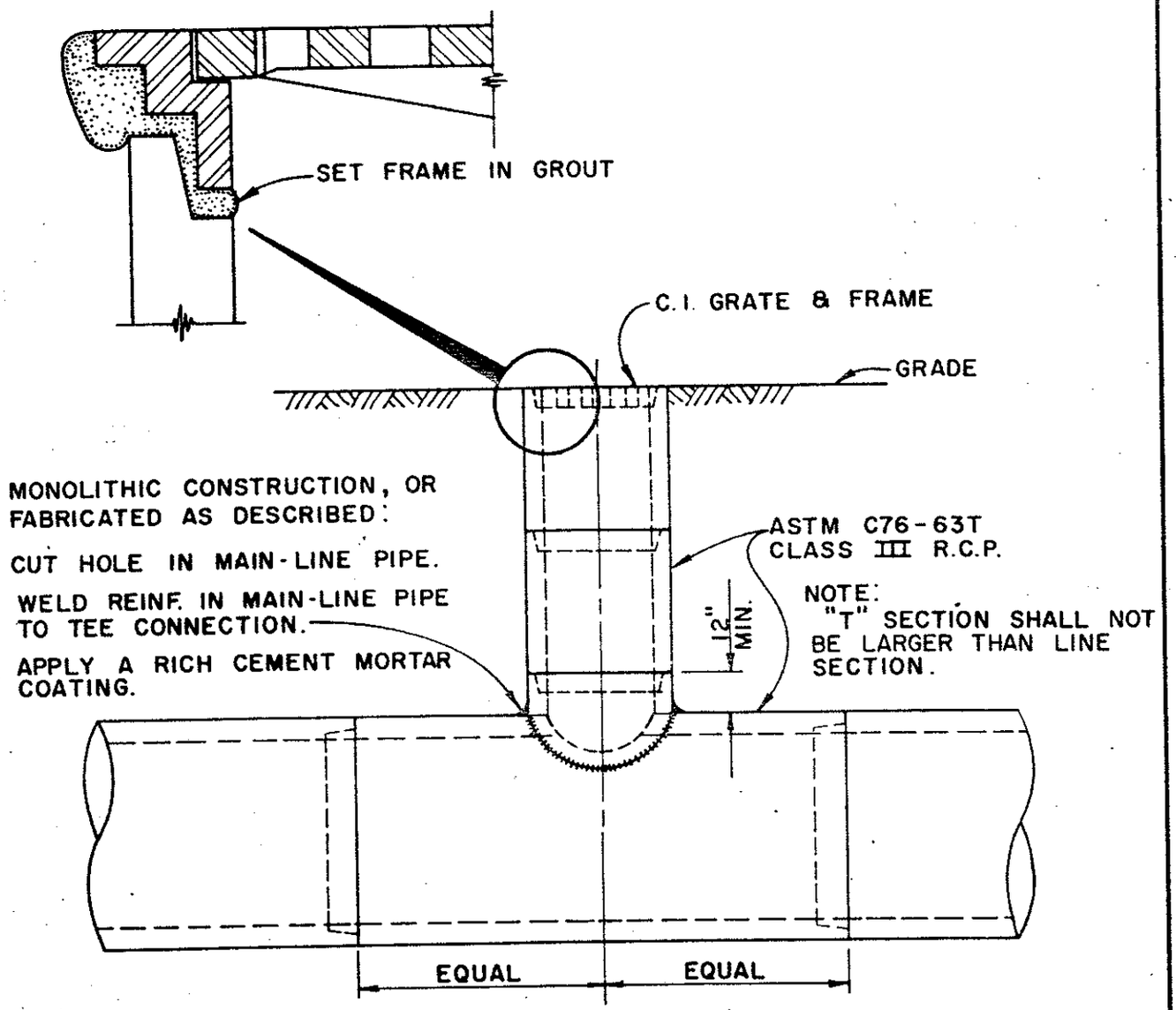

PRE-CAST SURFACE INLET

NON-TRAFFIC AREAS

FOR INFORMATION ONLY
Coordinate use w/Site Development Engr.

EXHIBIT A-2-75

WHEEL LOAD KIPS	D MIN.	d MIN.
16	30"	24"
12	27"	18"
9	24"	18"

NOTE:
"d" SHALL BE NO LARGER THAN "D".

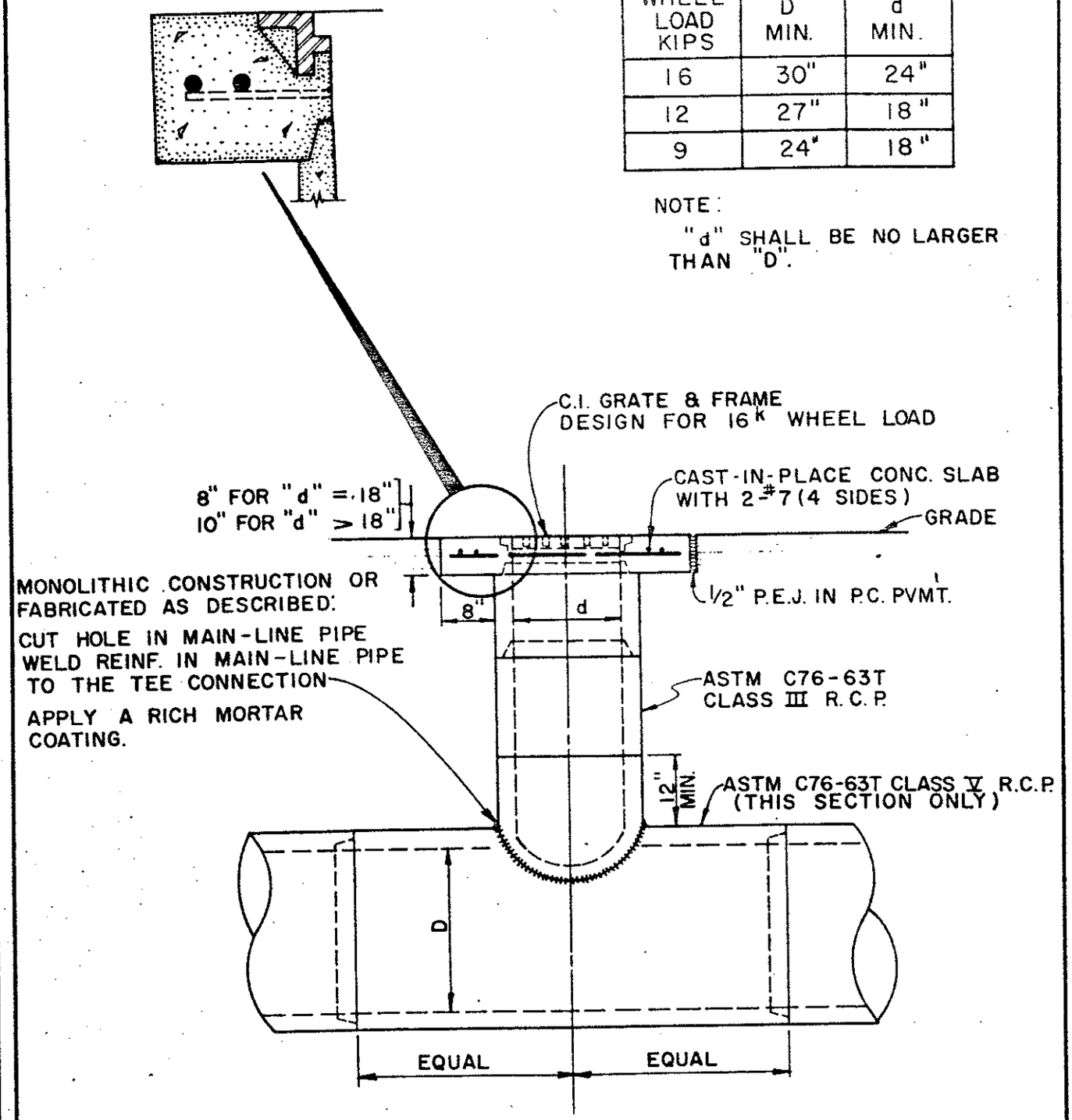

PRE-CAST SURFACE INLET

TRAFFIC AREAS

FOR INFORMATION ONLY
Coordinate use w/Site
Development Engr,

EXHIBIT A-2-76

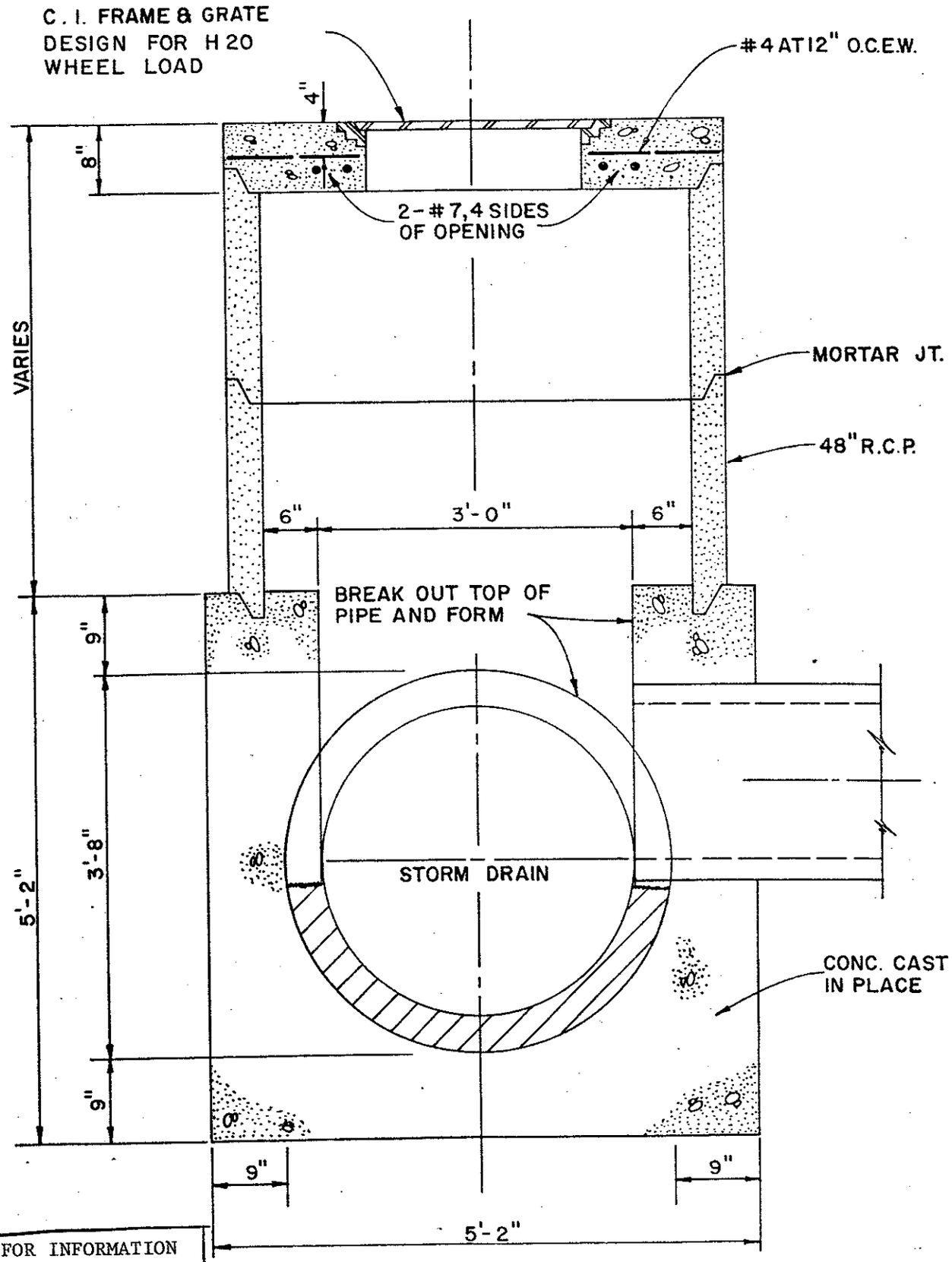

FOR INFORMATION ONLY - Coordinate use w/Site Development Engr.

PRECAST SURFACE INLET DETAIL

H20 WHEEL LOAD

EXHIBIT A-2-77

FOR INFORMATION ONLY
Coordinate use w/Site Development Engr.

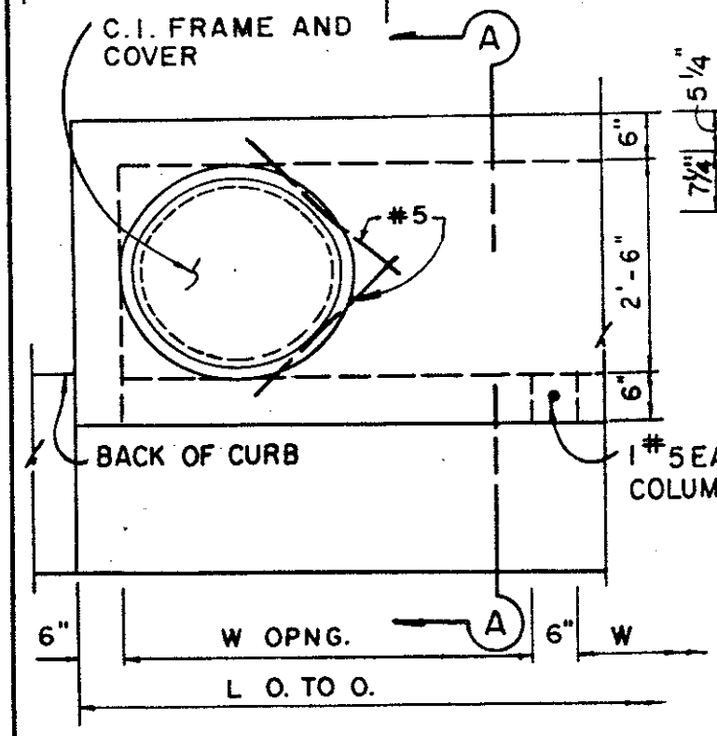

PLAN

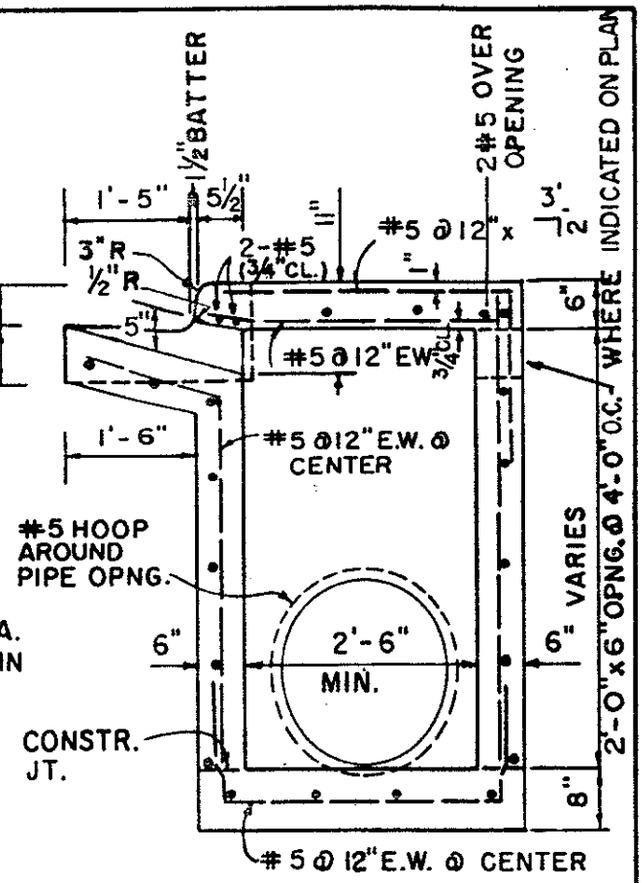

SECTION A-A

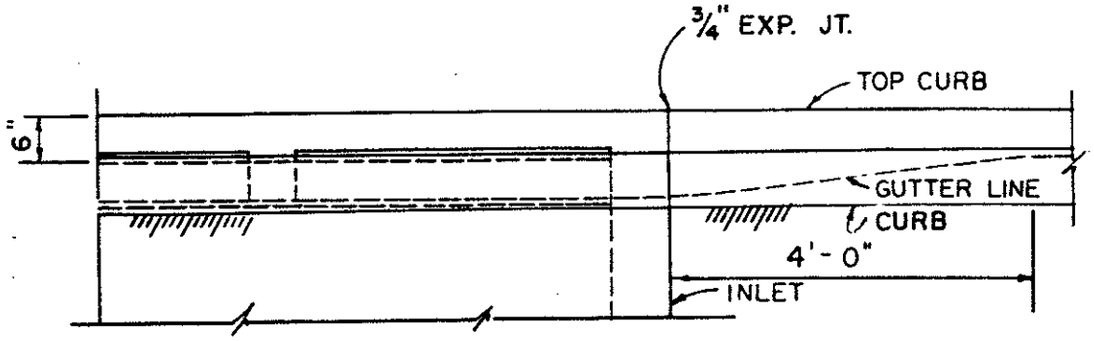

PART FRONT ELEVATION

TYPE	NO. OPNG.	W	L
A	1	4'-0"	5'-0"
B	2	3'-3"	8'-0"
C	3	2'-8"	10'-0"

STANDARD CURB INLET DETAILS

(LIGHT DUTY)

EXHIBIT A-2-78

CHAPTER A-3
ARCHITECTURAL

INDEX

3.1 GENERAL
- 3.1.1 Scope
- 3.1.2 Architectural Quality
- 3.1.3 Sustainable Design
- 3.1.4 Antiterrorism/Force Protection
- 3.1.5 Multiple Buildings
- 3.1.6 Site Adapting
- 3.1.7 Renovations

3.2 APPLICABLE PUBLICATIONS

3.3 PRECONCEPT SUBMITTAL REQUIREMENTS
- 3.3.1 Submittal
- 3.3.2 Design Approach

3.4 CODE 3 DESIGN SUBMITTAL REQUIREMENTS
- 3.4.1 Submittal

3.5 CONCEPT/EARLY PRELIMINARY (35 PERCENT) DESIGN SUBMITTAL REQUIREMENTS
- 3.5.1 Architectural Narrative
- 3.5.2 Design Calculations
- 3.5.3 Specification List
- 3.5.4 Fire Protection Design Analysis
- 3.5.5 Architectural Drawings
- 3.5.6 Single Line Perspectives

3.6 SIXTY PERCENT SUBMITTAL REQUIREMENTS
- 3.6.1 Implement Concept Submittal Review Comments
- 3.6.2 Architectural Drawings

3.7 PRELIMINARY (60 PERCENT) SUBMITTAL REQUIREMENTS
- 3.7.1 Implement Concept Submittal Review Comments
- 3.7.2 Architectural Narrative
- 3.7.3 Design Calculations
- 3.7.4 Specification List
- 3.7.5 Fire Protection Design Analysis
- 3.7.6 Architectural Drawings

3.8 FINAL (100 PERCENT) DESIGN SUBMITTAL REQUIREMENTS
- 3.8.1 Implement Concept and Preliminary Comments
- 3.8.2 Architectural Narrative
- 3.8.3 Design Calculations

3.8.4 Fire Protection Design Analysis
3.8.5 Hardware Consultant Qualifications
3.8.6 Arms Vault Certification
3.8.7 Final Drawings
3.8.8 Fire Prevention/Life Safety Plans
3.8.9 Specifications
3.8.10 Rendering

3.9 CORRECTED FINAL DESIGN SUBMITTAL REQUIREMENTS
3.9.1 Corrected Final Submittal
3.9.2 Implement Final Review Submittal Comments
3.9.3 Verify Consistency

3.10 REQUIREMENTS FOR PREPARATION OF DESIGN/BUILD RFP PACKAGES
3.10.1 General
3.10.2 Draft RFP Submittal
3.10.3 Final RFP Submittal

3.11 TECHNICAL REQUIREMENTS
3.11.1 Site Work
3.11.2 Masonry
3.11.3 Miscellaneous Metals
3.11.4 Thermal and Moisture Protection
3.11.5 Doors
3.11.6 Door Hardware
3.11.7 Finishes
3.11.8 Floor Drains and Slopes
3.11.9 Handicapped Accessibility
3.11.10 Arms Vaults

3.12 AESTHETIC GUIDANCE
3.12.1 Discussion
3.12.2 Policy

3.13 EXTERIOR PERSPECTIVES AND RENDERING
3.13.1 Exterior Perspectives and Rendering
3.13.2 Submittals

CHAPTER A-3

ARCHITECTURAL

3.1 GENERAL.

3.1.1 Scope. This chapter states criteria, requirements and guidance for architectural design. Specific submittal requirements in this chapter supplement the requirements of Volume 1.

3.1.2 Architectural Quality. The objective of the COE is to obtain attractive facilities that are designed using sound technical knowledge and constructed using recognized, good industry practices, as well as being cost effective. The design and construction shall incorporate those characteristics which will provide facilities with present and continuing utility, durability and desirability, and which will be economical to maintain for the life of the structure. The design shall also be such as to provide a safe and healthy environment.

3.1.3 Sustainable Design. The COE has a policy to support the design, construction, operation and reuse/removal of the built environment (infrastructure and buildings) in an environmentally and energy efficient manner. Architectural contributions include building envelope characteristics, solar control and day lighting, views, indoor air quality, environmentally preferable materials selections, salvage/reuse opportunities, waste reduction and close collaboration with all team members and User to synthesize successful sustainable design solutions. Chapter 14, Sustainable Design, contains detailed requirements.

3.1.3.1 Energy Conservation Study. Economic studies to evaluate the use of passive solar design techniques (building orientation, amount and location of windows, etc.) will be in accordance with Chapter A-7 ENERGY ANALYSIS.

3.1.4 Antiterrorism/Force Protection. All facilities must be designed in accordance with Department of Defense Antiterrorism Standards for Buildings, 25 January 2002 Draft.

3.1.5 Multiple Buildings. Unless directed otherwise, when a project includes multiple buildings drawings shall be sequenced so that each building has a separate stand-alone set of drawings.

3.1.6 Site Adapting. When site adapting standard working drawings or using earlier designs at other locations, the design changes will generally be limited to exterior revisions to comply with the Installation Design Guide or other applicable local criteria, the selection of alternate interior materials when such changes are economically justified and to changes necessary for updating for conformance to current criteria.

3.1.7 Renovations. On renovation and modification projects provide separate plans showing demolition work required. Indicate items to be removed with dashed lines and hatched/poche'd areas to clearly show quantities and extent. Provide demolition notes to clarify scope of demolition work.

3.2 **APPLICABLE PUBLICATIONS**. The following publications form a part of this Manual to the extent indicated by the references thereto.

ADAAG Americans with Disability Act Guidelines, Sep 1994

AR 190-11 Physical Security of Arms, Ammunition, and Explosives

EC 1110-1-92 Engineering Circular, "Classification of Type of Construction", 21 June 2000

Interim Department of Defense Antiterrorism/Force Protection Construction Standards, December 16, 1999

MIL-HDBK-1008c Military Handbook, "Fire Protection for Facilities Engineering, Design and Construction, 10 June 1997

NFPA 80 National Fire Protection Association, "Fire Doors and Windows", current edition

NFPA 101 National Fire Protection Association, "Life Safety Code", current edition

TI 800-01 Technical Instructions, Design Criteria, 20 Jul 1998

TI 802-01 Technical Instructions for Code 3 Design with Parametric Estimating, 15 May 1998

TI 800-03 Technical Requirements for Design-Build, 1 July 1998

TM 5-809-3 Technical Manual "Masonry Structural Design for Buildings"

UBC Uniform Building Code

UFAS Uniform Federal Accessibility Standards

3.3 **PRECONCEPT SUBMITTAL REQUIREMENTS**.

3.3.1 Submittal. Certain projects may be of such magnitude or significance that in order to select the best possible design the COE may require a study to be made prior to concept submittal. Where a preconcept submittal is specifically called for, the architect shall submit three separate schemes of the project (Scheme A, Scheme B, Scheme C) consisting of a site plan, floor plan and major elevations for each scheme.

3.3.2 Design Approach. Each scheme shall show the design approach in sufficient detail so that an evaluation by SAS and using agency together with the A-E may arrive at the most feasible scheme to prepare a concept package. This submittal shall be on full size drawing sheets printed at 1/2 size.

3.3.2.1 After selection of the most feasible scheme (A, B, or C), or a combination of the three, the preconcept submittal requirements of other disciplines will be accomplished.

3.4 **CODE 3 DESIGN SUBMITTAL REQUIREMENTS**.

3.4.1 Submittal. Submittal content and format shall be as described in TI 802-01, "Technical Instructions for Code 3 Design with Parametric Estimating".

3.5 **CONCEPT/EARLY PRELIMINARY (35 PERCENT) DESIGN SUBMITTAL REQUIREMENTS**.

3.5.1 Architectural Narrative. Provide a general description of the project. State the purpose, function, and capacities in sufficient detail to delineate and characterize functional features. State HC-accessibility requirement for the project. State the desired image or visual appearance of this project. Discuss how the project reflects the regional architecture and relates to the Installation Design Guide as well as the visual characteristics of the existing facilities around the site. Identify design features that convey the desired image. Describe interior partition construction types and where they are used. Include a statement of any requirements for signage plans or graphics. List all items that will be needed to complete the project but will not be included in the construction contract (Government-Furnished-Government-Installed).

3.5.2 Design Calculations. Submit complete calculations for toilet fixture/urinal/lavatory count in accordance with TI-800-01, Chapter 15.

3.5.3 Specification List. Provide a list of guide specifications to be used for this project. UFGS specifications are available on the internet at http://www.hnd.usace.army.mil/techinfo.

3.5.4 Fire Protection Design Analysis. Provide fire protection design analysis as required by Chapter A-6, Fire Protection.

3.5.5 Architectural Drawings. Drawings shall be provided in sufficient detail and so annotated for the using service to visualize how the designer has interpreted the user's functional and operational requirements in his proposal for final design. Drawings shall include, but not be limited to, the following:

3.5.5.1 Floor Plan(s). Floor plans for each floor shall be shown at 1:50 or 1:100 scale metric. If design is in inch-pound units, floor plans shall be 1/4″ = 1′-0″ or 1/8″ = 1′-0″. If the main floor plans must be drawn in segments in order to comply with the requirements on the proper scale, provide a smaller scale composite floor plan that fits on one sheet for each floor. Show the following:
Exterior walls
Interior partitions
Doors and door swings
Windows

Room names
Cross referencing for sections
Overall dimensions to allow independent verification of gross area tabulation
Gross area tabulation on lower portion of first floor plate, calculated in accordance with TI 800-01, chapter 5.

3.5.5.2 Room Finish Schedule. Provide room finish schedule indicating floor, wall base, wainscot, wall and ceiling finishes and ceiling and wainscot heights. Provide a legend for finish abbreviations.

3.5.5.3 Furniture Example Plan. Provide an example furniture plan to demonstrate functional aspects of floor plan and ability to meet program requirements. The furniture example plan is not a detailed plan.

3.5.5.4 Building Elevations. Provide building elevations at 1:100 metric (1/8″ = 1′-0″ inch-pound) for all major building elevations (at least four). Note all exterior materials, roof pitch, floor-to-floor and floor-to-eave dimensions. Indicate exterior colors.

3.5.5.5 Building and Wall Sections. Provide building cross section(s) at 1:100 metric (1/8″ = 1′-0″ inch-pound) that show major structural elements and building volume. Provide a typical exterior wall section at 1:20 metric (3/4″ = 1′-0″ inch-pound). Wall section shall be unbroken where practical and show materials, individual material and overall wall thicknesses, floor-to-floor height, grade and steps.

3.5.5.6 Fire Prevention/Life Safety Plans. Provide fire prevention/life safety plans as required by Chapter A-6, Fire Protection.

3.5.7 Single Line Perspectives. When required by contract, provide single line perspective drawings in accordance with paragraph 3.13.

3.6 **SIXTY PERCENT SUBMITTAL REQUIREMENTS**.
This submittal consists of a limited number of drawings. It's purpose is to check progress, functional layout and incorporation of concept review comments. Design does not stop at this submittal.

3.6.1 Implement concept submittal review comments.

3.6.2 Architectural Drawings. Drawings shall be provided in sufficient detail and so annotated for the using service to visualize how the designer has interpreted the user's functional and operational requirements in his proposal for final design. Drawings shall include, but not be limited to, the following:

3.6.2.1 Floor Plans. Provide floor plans as required for concept submittal, with the following additional information:
Stairs and utility spaces properly related to exterior access roads, parking, service areas, etc.

Structural grid system and columns
Fire rating and smoke resistance of walls and partitions
Door and Room numbers
Window type symbols
Cross referencing for enlarged floor plans
Floor slopes and floor drains
Dimensions

3.6.2.2 Schedules

3.6.2.2.1 Room Finish Schedule. Provide as required for concept submittal.

3.6.2.2.2 Door Schedule. Show door numbers, door and frame types, door size, door and frame materials and fire ratings.

3.6.2.3 Door and Frame Types. Door and frame types shall be placed on the same sheet, where possible, with the door schedules.

3.6.2.4 Window Types. Indicate for each window type dimensions, type of operation, frame material, glazing type and thickness.

3.6.2.5 Enlarged Floor Plans. Provide enlarged floor plans for toilet rooms, stairs and other major elements at 1:50 scale metric (1/4″ = 1′-0″ inch-pound). Show toilet partitions, toilet accessories and HC clearances as required.

3.6.2.6 Elevations. Provide elevations as required for concept submittal, with the following additional information:
Louvers
Gutters and downspouts
Visible structural frame

3.6.2.7 Sections. Provide typical building sections through the entire building showing coordination with structural system and room volumes. Provide wall sections showing typical exterior wall conditions including porches, loading docks and other special conditions.

3.6.2.8 Roof Plan. Provide a roof plan showing roof slopes, gutters and downspouts, roof drains and scuppers.

3.6.2.9 Equipment Plans and Schedules. Where food preparation and serving equipment is required, provide equipment plans and schedule fully defining the equipment. Schedule may be provided on the equipment plan sheet or on a separate sheet immediately following. Medical facility casework and equipment schedules shall be provided in a similar manner. Indicate by schedule which items shall be furnished by the Contractor and which shall be furnished by the Government.

3.6.2.10 Fire Prevention/Life Safety Plans. Provide fire prevention/life safety plans as required by Chapter A-6, Fire Protection.

3.7 **PRELIMINARY (60 PERCENT) SUBMITTAL REQUIREMENTS**.

3.7.1 Implement concept submittal review comments.

3.7.2 Architectural Narrative. Provide as indicated for Concept submittal, updated for design development.

3.7.3 Design Calculations. Submit complete calculations for toilet fixture/urinal/lavatory count in accordance with TI-800-01, Chapter 15.

3.7.4 Specification List. Provide a list of guide specifications to be used for this project. UFGS specifications are available on the internet at http://www.hnd.usace.army.mil/techinfo.

3.7.5 Fire Protection Design Analysis. Provide fire protection design analysis as required by Chapter A-6, Fire Protection.

3.7.6 Architectural Drawings. Drawings shall include, but not be limited to, all drawings required for Sixty Percent submittal (Para 3.6).

3.8 **FINAL (100 PERCENT) DESIGN SUBMITTAL REQUIREMENTS**.

3.8.1 Implement Concept and Preliminary review comments.

3.8.2 Architectural Narrative. Provide as indicated for Concept submittal, updated for design development.

3.8.3 Design Calculations. Submit complete calculations for the following:

3.8.3.1 Calculations for toilet fixture/urinal/lavatory count in accordance with TI-800-01, Chapter 15.

3.8.3.2 Calculations for gutter and downspout sizing.

3.8.4 Fire Protection Design Analysis. Provide fire protection design analysis as required by Chapter A-6, Fire Protection.

3.8.5 Hardware Consultant Qualifications. Provide name and statement of qualification of certified hardware consultant used to select and specify the hardware sets.

3.8.6 Arms Vault Certification. Submit signed and dated Arms Vault Checklist (Exhibit A-3-1) for each arms vault in project.

3.8.7 Final Drawings. Final drawings shall show all pertinent plans, elevations, sections, details, schedules and notes to present a complete description of the construction required. Architectural drawings shall be coordinated with the structural, mechanical, electrical and site drawings and with the specifications. Dimensions, schedules, sections and details shall be completely checked. Door, window, and space numbers or symbols shall be properly shown. Locations of wall sections and cross sections shall be shown on plans and elevations. All errors and discrepancies noted shall be corrected. Assure drawing index is complete and coordinated with the drawings. Coordinate reflected ceiling plans with electrical and mechanical plans. Roof details shall be provided for all roof conditions and shall be no smaller than 1:5 metric (3″ = 1′-0″ inch-pound). Lapping of flashings and membranes shall be clearly shown and dimensioned on roof details. Brick expansion joints shall be shown and labeled on floor plans and building elevations. CMU control joints shall be shown and labeled on floor plans. Floor slopes shall be diagrammed and floor drains shall be shown on floor plans. Tile expansion joints (including those required over slab joints) shall be shown and labeled on floor plans or tile pattern plans. Ceiling access panels shall be shown on reflected ceiling plans. Gutter expansion joints and downspouts shall be shown and labeled on roof plans.

3.8.8 Fire Prevention/Life Safety Plans. Provide fire prevention/life safety plans as required by Chapter A-6, Fire Protection. Include these drawings in the contract documents with a note on each sheet stating that this drawing is included for reference only and that all requirements shown are indicated elsewhere in the contract documents.

3.8.9 Specifications. Specifications shall be written using the latest UFGS guide specifications. Notes to the specification writer shall be thoroughly reviewed before marking for typing. The specification writer shall be familiar with the drawings, and shall coordinate his work with the person(s) doing the plans so that there will not be discrepancies.

3.8.10 Rendering. When required by contract, provide rendering per paragraph 3.13.

3.9 **CORRECTED FINAL DESIGN SUBMITTAL REQUIREMENTS**.

3.9.1 The corrected final submittal is not to be considered a normal design level and will be provided in those cases in which the review comments require revision to the final submittal documents.

3.9.2 Implement final review submittal comments.

3.9.3 Verify consistency between plans, specifications and final corrections.

3.10 **REQUIREMENTS FOR PREPARATION OF DESIGN/BUILD RFP PACKAGES**.

3.10.1 General. Unless indicated otherwise, RFP shall be based upon “partial” design development as defined by TI 800-03 “Technical Instructions for Design-Build”. Unless indicated otherwise, AE shall be furnished an electronic format sample or template for the written technical requirements portion of the RFP to be edited for the specific project.

3.10.2 Draft RFP Submittal. Submit the following:

Concept floor plan(s) as described in TI 800-03.
Concept elevations as described in 3.5 above.
Concept building and/or wall sections for special design conditions.
Concept Fire Protection Design analysis as described in Chapter A-6 Fire Protection
Functional requirements document to include, as a minimum, for each space: description of use of space, minimum net area, number of occupants, hours of occupation, features, furniture and equipment, adjacencies, finishes, ceiling height.
Specification indicating architectural design requirements.

3.10.3 Final RFP Submittal.

3.10.3.1 Implement final review submittal comments.

3.10.3.2 Verify consistency between plans, specifications and final corrections.

3.11 **TECHNICAL REQUIREMENTS**.

In addition to the Criteria contained in the following paragraphs, architectural design shall comply with technical instructions. Materials and construction methods shall comply with the instructional notes inserted in the applicable guide specifications.

3.11.1 Site Work.

3.11.1.1 Access to Entrances. All stoops, steps, or similar required access to entrances that will normally be built by a building Contractor as differentiated from sidewalks, driveways, etc., which are normally constructed by a paving subcontractor, shall be shown on the architectural drawings.

3.11.2 Masonry.

3.11.2.1 Interior Walls and Partitions. Concrete masonry units in interior masonry walls and partitions shall be not less than 200 mm (8 inches) in nominal thickness.

3.11.2.2 Coursing. Concrete masonry unit coursing shall be coordinated with door heights to eliminate the need for cutting a block.

3.11.2.3 Grout-filled cavities between wythes of exterior masonry walls is not allowed. Grouting of reinforced concrete masonry unit cores is allowed.

3.11.2.4 Single wythe masonry exterior building walls are not allowed.

3.11.2.5 Brick Expansion Joints (BEJ) and CMU Control Joints (CJ). Provide brick expansion joints and CMU control joints in accordance with the spacing guidelines in TM 5-809-3 “Masonry Structural Design for Buildings”, Chapter 4.

3.11.3 Miscellaneous Metals. All access panels required to service mechanical items normally furnished and installed by the non-mechanical trades shall be shown on the architectural drawings. Make sure that access panels, when required, are specified. Exposed exterior metals shall be the same finish and color.

3.11.4 Thermal and Moisture Protection.

3.11.4.1 Roof and Wall Insulation Thickness. Except when required for refrigerated spaces, roof and wall insulation shall be drawn at a nominal thickness consistent with the insulation requirements of the particular building or project. The thickness of roof or wall insulation shall not be dimensioned nor the thickness indicated on the drawings. Exceptions:

a. In roofing alterations or reroofing projects where insulation is required only to provide required roof slope for drainage.

b. Where insulation is used as back-up for a stucco type system finish only in alteration work to provide a new facade.

General standards for insulation, as indicated in the applicable guide specification, require insulation thickness as determined by the established "U" value for total roof or wall thickness, and the type of material utilized. Unless specifically directed, "U" values shall be provided. Details shall allow for possible differences in insulation thickness. "U" values shall be called for in the specifications and not shown on the drawings.

3.11.4.2 Exterior Insulation Finish System (EIFS). EIFS system shall be water-managed type with drainage for intruded moisture. Edit guide specification for this feature and provide typical details showing it.

3.11.4.3 Thermal Envelope. Ensure conditioned facilities have a complete uninterrupted thermal envelope. Water and fire sprinkler pipes must be located inside the building thermal envelope.

3.11.4.4 Roof Slope. The roof slope for low-slope (built-up or membrane) roof shall be minimum 1:50 (1/4 inch per foot) and maximum 1:6 (2 inches per foot). Single-ply roofs shall in general, conform to the minimum slope of 1:50 (1/4 inch per foot). Structural standing seam metal roofs shall be a minimum of 1:25 (1/2 inch per foot). Architectural standing seam metal and shingle roofs shall be a minimum of 1:3 (4 inches per foot).

3.11.4.5 Sheet Metal. In all cases, sheet metal for various elements used throughout a building shall be of the same basic metal. Atmospheric conditions shall be considered in the selection of exposed sheet metal.

3.11.4.6 Louvers. All louvers shall be storm louvers and shall have enclosed drainable sill pans with end dams.

3.11.4.7 Downspouts. When downspouts are required, they shall not drain directly onto a walk, platform, or open ground. When downspouts must occur at walks or platforms, they shall pass through or under into underground drains or toward open ground beyond. Downspouts draining onto open ground shall be diverted to prevent erosion by utilizing splash blocks. Use of interior roof drains shall be avoided where possible. When interior roof drains are used provide overflow scuppers.

3.11.4.8 Gutters. Gutters shall be exposed. Concealed gutters shall not be used. The A-E shall provide specific details on the plans of how expansion joints are to be constructed as well as appropriate fabrication and installation details.

3.11.4.9 Bituminous Damproofing. The practice of using bituminous damproofing on the inner wythe of cavity wall masonry construction above grade is discouraged. This is not required by OCE and Savannah District criteria. Where it is specified it is usually deleted by a Value Engineering Proposal or by an architectural reviewer's comment.

3.11.5 Doors.

3.11.5.1 All pedestrian doors shall be 2100 mm (7 feet 0 inch or 7 feet 2 inches), or 2400 mm (8 feet 0 inch) high except in family housing where they may be 2000 mm (6 feet 8 inches). Door openings shall, in general, be 900 mm (3 feet 0 inch) in width, except for special purpose doors, toilet rooms, closets, family housing, etc. Refer to UFAS for handicapped requirements.

3.11.5.2 Doors to rooms shall be adequate size to accommodate the installation and removal of furniture and equipment installed herein without requiring demolition.

3.11.5.3 Exterior Doors. Except in underground structures, doors to boiler or mechanical rooms shall normally be provided to the exterior for all buildings. Doors from the power rooms, generator rooms, etc., should be to the outside of the building only.

3.11.5.4 Special type doors such as rolling doors shall be adequately designed to safely resist the required wind pressures. Rolling steel or aluminum doors shall be designed so as to permit operation of the door at maximum wind velocities defined in the area where used.

3.11.5.5 Louvers. Overall size of return air or air intake louvers located in doors shall be indicated in the Door Schedule. Minimum bottom rail dimension shall be 75 mm (3 inches) and the minimum stile dimension shall be 125 mm (5 inches). Variable louver dimension shall be in height only, for simplicity and appearance.

3.11.6 Door Hardware

3.11.6.1 Hardware Consultant. A certified hardware consultant shall be used to select and specify the hardware sets.

3.11.6.2 Coordination of door numbers and hardware set numbers shall be accomplished by indicating hardware set numbers for each door on the Door Schedule or by listing

applicable door numbers at each hardware set heading in the hardware schedule. Do not indicate hardware set numbers on the floor plans.

3.11.6.3 Hardware sets. Hardware set components shall be indicated using ANSI designations.

3.11.6.4 Proprietary Hardware. Under no circumstances shall proprietary hardware be specified unless a specific waiver has been obtained authorizing its use.

3.11.6.5 Hardware Sets. When selecting hardware sets, limit the use of closers to reasonable locations. Parallel arm closers are required when the hinged jamb is less than 178 mm (7 inches) from the adjacent wall. Door locations should be studied in the design stage to eliminate the need for parallel arm closers. Limit the use of door coordinators at pairs of doors only in those locations where removable mullions cannot be used. Except in cases where aesthetics are extremely important AND the door will not receive heavy use, do not use concealed vertical rod exit devices. Consider specifying knob trim only at non-HC accessible facilities for increased durability.

3.11.7 Finishes.

3.11.7.1 Finishes Disclaimer. Interior and exterior finishes may be specified by using manufacturer and product names. When this is done, a disclaimer must be placed on the drawings or in the specification where this is done that states the following:
"The manufacturer's names and their products referenced indicate the color, texture, and pattern required for the materials listed. The products furnished shall meet the color, texture, and pattern indicated as well as the material quality and performance specified in the applicable technical section. The use of manufacturer's names and products do not preclude the use of other manufacturer's products of approved equal color, texture, and pattern as long as all requirements in the technical sections are met".

3.11.7.2 Acoustical Tile. In electronic and communications facilities in which avoidance of dust is a major consideration, acoustical treatment shall be limited to acoustical tile with nondusting characteristics. Square tile 600mm x 600mm (24" x 24") shall be used at all areas. Insulation shall not be placed directly above acoustic tile ceilings.

3.11.7.3 Ceramic Tile on Concrete Masonry Units (CMU). Utilize thickset (setting bed) method for installation of ceramic tile when applied directly to CMU.

3.11.8 Floor Drains and Slopes. Floor drains and shower heads shall be shown on architectural drawings as well as on mechanical drawings, and shall be closely coordinated. All floors in areas requiring drains shall be sloped toward the drains, and coordinated with structural drawings for depressed slab requirements.

3.11.9. Handicapped Accessibility. Where facilities for the handicapped are to be included in whole or in part, the design shall be in accordance with the American With Disabilities Act Accessibility Guidelines (ADAAG), and Uniform Federal Accessibility Standards (UFAS). In case of conflict, the more stringent requirement shall be followed.

3.11.10. Arms Vaults. Arms vaults where called for and required shall be designed in conformance with AR 190-11. Arms Vault Checklist (Exhibit A-3-1) will be completed by the architect and submitted with the final submittal.

3.12 **AESTHETIC GUIDANCE**.

3.12.1 Discussion. The aesthetic quality of an area is not determined solely by the architecture of its buildings, the complexity of its site development and landscape features, or the size, shapes, colors, and textures which are predominant; it is determined by how well all these elements function together and complement existing natural and man made features.

3.12.2 Policy. The A-E shall be responsible for insuring that proper attention is paid to achieving an aesthetic design solution which includes harmony of design and the visual linkage of architecture to the surrounding community. New design projects shall respect the architectural character of existing facilities that are to remain and that are considered to be architecturally appropriate for the environment. Where the architecture of existing permanent facilities reflect a predominant character or style, the new facilities should be designed to be in harmony with that character or style. This emphasis will also be placed on landscaping and structures other than buildings. Follow the Installation Design Guides or other applicable local criteria.

The architect shall take the lead on ensuring aesthetic coordination is accomplished for all design disciplines. The following items will be addressed in each design:

a. All designers shall consider the effects of their decisions upon the project aesthetics.

c. During concept design, a site visit will be made for familiarization and color photographs taken of the surrounding area.

e. Special attention shall be given to color and materials selection in relationship with existing surroundings.

f. Landscaping, exterior lighting, and signage shall be given the same aesthetic consideration as the structures.

g. The exterior treatment of renovated buildings shall be in harmony with the effort to improve the aesthetic quality of an area.

h. Potential site adapted building(s) shall be reviewed with the same aesthetic criteria required for new design.

i. The screening of exterior equipment, i.e., chillers, cooling tower, transformers, etc., will be accomplished whenever possible.

j. Provide underground electrical service lines whenever possible.

k. Primary entrances to buildings shall be architecturally delineated so entrance location is obvious to a visitor approaching the building.

l. Restrooms shall be arranged to ensure visual privacy from adjacent areas.

3.13 **EXTERIOR PERSPECTIVES AND RENDERING**.

3.13.1 Exterior Perspectives and Rendering. The exterior perspective and rendering requirement applies to facilities having a significant visual impact within an installation and/or occupancy which requires special design attention. When required by contract, provide the following.

3.13.1.1 Concept: Single line perspectives indicating the three dimensional aspects of the facility with emphasis on the main building features, shall be provided at concept design. The perspectives will illustrate the view planned for the final color rendering. In addition, 200 x 300 mm (8-inch by 10-inch) sample photos shall be provided showing the rendering techniques to be used.
When required by contract, provide three softline sketches of alternate exterior perspectives (three different exterior treatments of same floor plan) depicting the exterior design motif, massing, building materials, color, texture, and site features. All alternatives shall be within construction cost limit.

3.13.1.2 Final: A 500 x 750 mm (20-inch by 30-inch) full color rendering by a professional architectural renderer and two full size photographic, true color, copies shall be provided at the final design submittal, showing the view approved in the single line perspective and illustrating the colors and patterns of exterior building materials. (An example of the color medium to be used shall be submitted for approval prior to submittal of full color rendering.) In addition, two 200 x 300 mm (8-inch by 10-inch) color photos of the color rendering with a 125 x 175 mm (5-inch by 7-inch) negative shall be provided. The project title and location shall appear on the rendering front side. The project title, line item number, fiscal year and location shall appear on the back side.

3.13.2 Submittals. Provide the required information as indicated below:

3.13.2.1 Concept Design: Include one copy of concept requirements in the following submittal packages: Project Manager, Architectural (EN-DA), and Engineering Central Files (EN-SF).

3.13.2.2 Final Design: Include final requirements in the final submission to the Project Manager. The rendering and full size photographic copies shall be matted and framed. Provide one each 200 x 300 mm (8-inch by 10-inch) color photo, of rendering only, to Architectural (EN-DA) and Engineering Central Files (EN-SF).

CHAPTER A-3

ARCHITECTURAL

EXHIBITS

A-3-1 Architect Engineer Checklist of Items Governing Design for Arms Vault Constructed in Accordance with DOD 5100.76M

ARCHITECT ENGINEER CHECKLIST FOR ITEMS GOVERNING DESIGN FOR ARMS VAULT
CONSTRUCTED IN ACCORDANCE WITH DOD 5100.76M

Base	FY	Contract
Project	L.I.	
Firm Name	Date	

	Yes	No	N/A
A. FLOORS:			
1. 6-inch thick concrete slabs reinforced with 6x6-W4xW4 mesh.	___	___	___
2. 6-inch thick concrete slabs reinforced with steel bars (floor forms the ceiling of under-laying room or area).	___	___	___
3. 2-inch concrete topping over existing floor slab.	___	___	___
4. Existing slabs removed and replaced with new 6-inches of reinforced concrete.	___	___	___
B: WALLS:			
1. 8-inch concrete reinforced with No.4 bars at 9-inches on center in each direction and staggered on each face to form a grid approximately 4-1/2 inches square.	___	___	___
2. 8-inch concrete masonry units with No. 4 bars threaded through masonry units cavities at 8 inches o.c. with all cells filled with mortar or concrete, and horizontal joint reinforcing required at every course.	___	___	___
3. 8-inches of brick interlocked between inner and outer courses.	___	___	___
4. Existing walls: New 8-inch reinforced (inner) (outer) walls constructed against existing walls.			
C. CEILING:			
1. 8-inch) concrete slab reinforced with No. 4 bars minimum, and forming a grid where the area of any opening does not exceed 96 square inches.	___	___	___
2. Concrete Pan Joist: Thinnest portion of joist not less than 6-inches and the clear space between joist not exceed 20-inches. Reinforcing bars spacing form a grid where the area of any opening does not exceed 96 square inches.	___	___	___
3. _____inch concrete topping provided over existing concrete ceiling slab. Reinforcing bars spacing from a grid where the area of any opening does not exceed 96 square inches.	___	___	___
D: DOORS:			
1. Doors provided to Arms Vault. Each door 1-3/4-inch thick solid wood core with 12-gauge metal plate securely attached to outside face. (Chapter 4, paragraph B.1.a.(4)(a) of DOD 5100.76-M).	___	___	___
2. Doors provided to Arms Vault. Doors shall be 1-3/4-inch thick hollow metal industrial type internally reinforced vertically with continuous steel stiffeners spaced 6-inches maximum on center. Minimum thickness or skin plate of doors is not less than 14 gauge.	___	___	___

3. One Class 5 steel vault door (Fed. Spec. AA-D-600B) with a built-in three position dial-type changeable combination lock used in lieu of door described above. ___ ___ ___

E. ARMS PASS WINDOW DOORS:
Pass window openings provided protection in accordance with Chapter 4, paragraph (5)(a)1.,2.,3., of DOD 5100.76-M. ___ ___ ___

F: DOORS AND PASS WINDOW FRAMES:
Frames are designed in accordance with Chapter 4, paragraph b.(4)(a)1., of DOD 5100.76-M. ___ ___ ___

G: HARDWARE FOR DOORS:
1. LOCKS (Chapter 4, paragraph B.1.a.(8) DOD 5100.76-M. ___ ___ ___

a. Door provided with a high security locking device. ___ ___ ___

b. Door provided with a high security hasp and padlock. ___ ___ ___

2. Door hinges are (fixed-pin security type) (safety-stud hinges) (with hinge pins spot welded) to prevent removal. ___ ___ ___

3. Hinge mounting screws not exposed to the outside of the Arms Rooms. ___ ___ ___

H. OPENINGS (Walls or Ceilings):
1. No openings required in walls or ceilings. ___ ___ ___

2. All openings greater than 96 square inches protected by a rod-and-bar grid as prescribed in Chapter 4, paragraph (5)(a) 1., 2., and

3., of DOD 5100.76-M. ___ ___ ___

I. ARMS ROOM ANCHOR RINGS:
Anchor rings provided at Arms Room walls to secure arms racks. ___ ___ ___

Anchor ring size , mounting height and spacing indicated on drawings. ___ ___ ___

J. SECURITY LIGHTING:
Interior entrances to Arms Rooms illuminated a minimum of 0.10 foot candle at any point within a 20-foot radius of the entrance. ___ ___ ___

K. INTRUSION DETECTION SYSTEM:
Intrusion alarm detection system provided for vault(s) as required in Chapter 3, paragraph F., of DOD 5100.76-M.

List any waivers, unusual requirements and additional features provided.

(Attach additional pages if required)

CERTIFICATION OF COMPLIANCE WITH CRITERIA SET FORTH IN DOD 5100.76-M

AE CONTRACTOR RESPONSIBLE FOR DESIGN:

_____ _____
Signature Date

CHAPTER A-4

Revised 12 Aug 2002

MECHANICAL

INDEX

4.1 GENERAL

4.2 APPLICABLE PUBLICATIONS
4.2.1 Architectural and Engineering Instructions
4.2.2 Department of the Army Technical Manuals (TM)
4.2.3 Air Force Manuals, Regulations and Instructions
4.2.4 Military Handbook
4.2.5 Military Specifications (MS)
4.2.6 National Association of Plumbing-Heating-Cooling Contractors/American Society of Plumbing Engineers (NAPHCC/ASPE) Standard
4.2.7 American Society of Mechanical Engineers (ASME)
4.2.8 Air Conditioning and Refrigeration Institute (ARI)
4.2.9 American Conference of Governmental Industrial Hygienists (ACGIH)
4.2.10 American Society of Heating, Refrigeration, and Air Conditioning Engineers (ASHRAE) Inc. Standards (Latest Edition)
4.2.11 Sheet Metal and Air Conditioning Contractors' National Association (SMACNA) Inc. (Latest Edition)
4.2.12 National Fire Protection Association (NFPA) Standards
4.2.13 Army Regulation
4.2.14 Steel Structures Painting Council (SSPC)
4.2.15 Guide Specifications

4.3 PRECONCEPT SUBMITTAL REQUIREMENTS

4.4 CODE 3 DESIGN REQUIREMENTS

4.5 CONCEPT/EARLY PRELIMINARY (35 PERCENT) DESIGN SUBMITTAL REQUIREMENTS
4.5.1 Concept/Early Preliminary Design Analysis
4.5.2 Concept/Early Preliminary Drawings
4.5.3 Concept/Early Preliminary Specifications
4.5.4 Standard Drawings or Site Adaptations
4.5.5 Field Investigation

4.6 PRELIMINARY (OVER THE SHOULDER) SUBMITTAL REQUIREMENTS

4.7 PRELIMINARY (60 PERCENT) DESIGN SUBMITTAL REQUIREMENTS
4.7.1 Preliminary Design Analysis
4.7.2 Standard Computation Forms
4.7.3 Preliminary Drawings
4.7.4 Preliminary Specifications

4.8 FINAL (100 PERCENT) DESIGN SUBMITTAL REQUIREMENTS
4.8.1 Final Design Analysis

4.8.2 Final Drawings
4.8.3 Final Specifications

4.9 CORRECTED FINAL DESIGN SUBMITTAL REQUIREMENTS
4.9.1 Notice
4.9.2 Compliance

4.10 REQUIREMENTS FOR DESIGN/BUILD RFP PACKAGES

4.11 TECHNICAL REQUIREMENTS
4.11.1 Statement of Work
4.11.2 Basic Technical Requirements
4.11.3 Coordination of Work
4.11.4 Supplementary Technical Manuals (TM) and Engineering Technical Letters (ETL)
4.11.5 Guide Specifications
4.11.6 System Selection
4.11.7 Standard Systems Criteria

EXHIBITS

A-4-1 Typical Design Analysis Format for Closed Head Sprinkler System
A-4-2 Heating and air-conditioning Outside Design Conditions for Savannah District Sites
A-4-3 Sample Mechanical Equipment Schedules
A-4-4 HVAC System Alternatives
A-4-5 Savannah District Certificate for Design of Mechanical Room

CHAPTER A-4

MECHANICAL

4.1 **GENERAL**. This chapter provides guidance for preparation and development of the following design aspects: Heating, ventilating, air conditioning (including chilled water and dual-temperature water distribution systems), plumbing (including compressed air, fuel gas, medical gas systems), fire suppression systems, central energy plants, and P.O.L. systems. Guidance for other mechanical systems will be provided in the Specific Instructions.

4.2 **APPLICABLE PUBLICATIONS**. The most current editions of the publications listed below constitute an addendum to this chapter wherever referenced or applicable.

4.2.1 Architectural and Engineering Instructions (AEI), "Design Criteria," 3 July 1994 or later Edition

Department of the Army Technical Instructions (TI), Design Criteria, 20 July 1998

4.2.2 Department of the Army Technical Manuals (TM).

TM 5-785 Engineering Weather Data

TM 5-805-4 Noise and Vibration Control for Mechanical Equipment

TM 5-809-10 Seismic Design for Buildings

TM 5-810-1 Mechanical Design, Heating, Ventilating, and Air Conditioning

TM 5-810-2 High Temperature Water Heating Systems

TM 5-810-3 Mechanical Refrigeration and Ventilation in Cold-Storage Facilities

TM 5-810-4 Compressed Air

TM 5-810-5 Plumbing

TM 5-810-6 Nonindustrial Gas Piping Systems

TM 5-810-7 High-Pressure Gas and Cryogenic Systems

TM 5-815-1 Air Pollution Control Systems for Boilers and Incinerators

TM 5-840-2 Storage Depots

TM 5-848-1 Gas Distribution

TM 5-848-2 Handling of Aircraft and Automotive Fuels

4.2.3 Air Force Manuals, Regulations, and Instructions.

AFM 88-3 Chapter 13,Seismic Design for Buildings

AFM 88-8 Chapter 4, Plumbing

AFM 88-29 Engineer Weather Data

MIL-HDBK-1190 Chapter 10, Sections A thru F Heating, Ventilating, and Air Conditioning

AFI32-1061 Provide Utilities for US Air Force Installations

AFI32-1054 Corrosion Control

AFI32-1066 Plumbing Systems

AFI32-1067 Water Systems

AFI32-1068 Heating Systems and Unfired Pressure Vessels

AFI32-1069 Gas Supply and Distribution

AFI32-7040 Air Quality Compliance

AFI32-7041 Water Quality Compliance

AFI32-7044 Storage Tank and Compliance

4.2.4 Military Handbook.

MIL-HDBK-1008C Fire Protection for Facilities - Engineering, Design, and Construction

MIL-HDBK-1190 Military Handbook Facility Planning and Design Guide

4.2.5 Military Specifications (MS).

MS MIL-H-22547 (Rev C) Heat Pumps, Heating and Cooling (Unitary) (8,400 to 300,000 BTU)

MS MIL-C-4556 (Rev E) Coating Kit, Epoxy, for Interior of Steel Fuel Tanks

4.2.6 International Association of Plumbing and Mechanical Officials.

Uniform Plumbing Code

4.2.7 American Society of Mechanical Engineers (ASME).

B31.1 Power Piping

Section I Power Boilers

Section IV Heating Boilers

Section VIII Pressure Vessels, Division 1

4.2.8 Air Conditioning and Refrigeration Institute (ARI).

Std 210/240 Unitary Air-Conditioning and Air-Source Heat Pump Equipment

Std 310 Packaged Terminal Air-Conditioners and Heat Pumps

Std 320 Water-Source Heat Pumps

Std 410 Forced-Circulation Air-Cooling and Air-Heating Coils

Std 440 Room Fan-Coil and Unit Ventilator

Std 550 Centrifugal or Rotary Screw Water-Chilling Packages

Std 560 Absorption Water-Chilling and Water Heating Packages

Std 590 Positive Displacement Compressor Water-Chilling Packages

4.2.9 American Conference of Governmental Industrial Hygienists (ACGIH).

Industrial Ventilation

4.2.10 American Society of Heating, Refrigeration, and Air Conditioning Engineers (ASHRAE), Inc. Standards (Latest Edition).

HVAC Applications
HVAC Systems and Equipment
Fundamentals
Refrigeration
ASHRAE Standard 62-1989 Ventilation for Acceptable Indoor Air Quality
ASHRAE Guideline 1-1996 The HVAC Commissioning Process

4.2.11 Sheet Metal and Air Conditioning Contractors' National Association (SMACNA), Inc. (Latest Edition).

Fibrous Glass Duct Construction Standards

HVAC Duct Construction Standards-Metal and Flexible

4.2.12 National Fire Protection Association (NFPA) Standards.

Current Edition of the National Fire Codes

NFPA 13 Automatic Sprinkler Systems

NFPA 54 National Fuel Gas Code

NFPA 90A Installation of Air Conditioning and Ventilating Systems

NFPA 90B Installation of Warm Air Heating and Air Conditioning Systems

4.2.13 Army Regulation.

AR 380-380 Automation Security

4.2.14 Steel Structures Painting Council (SSPC).

SSPC SP 5 White Metal Blast Cleaning

4.2.15 Guide Specifications.

See Chapter 11 of this manual.

4.3 **PRECONCEPT SUBMITTAL REQUIREMENTS**. No requirements for this section.

4.4 **CODE 3 DESIGN REQUIREMENTS.** To be provided with specific instructions to contract or delivery order.

4.5 **CONCEPT/EARLY PRELIMINARY (35 PERCENT) DESIGN SUBMITTAL REQUIREMENTS**.

4.5.1 Concept/Early Preliminary Design Analysis. The narrative will form the basis of the future Preliminary and Final Design Analyses, as required for Preliminary (60 Percent) Design Submittal and Final (100 Percent) Design Submittal of this chapter, depending on submittal requirements, and will contain the following in narrative form:

a. Heating, Ventilating, and Air Conditioning.

(1) Criteria listings - manuals, pamphlets, technical books, etc.

(2) Design conditions used in calculations - inside and outside temperatures, personnel load, equipment heat release (if any), outside air or ventilation requirements, U-factors, and other special conditions.

(3) Block loads for heating and cooling shall be calculated using ASHRAE-based computer-generated load calculations. Where passive solar applications prove feasible and cost effective (see CHAPTER A-7, ENERGY ANALYSIS), the Designer shall employ a load calculation method that can incorporate all applicable passive solar factors. All load calculation software must be approved in advance by the Savannah District. For all calculations (cooling load, heating load, pipe sizing, duct sizing, etc.), the design analysis shall contain layout sketches that show how the building or system was segmented for computer input.

(4) Type of systems considered and full description including justification for selection, description of air distribution, zoning and control description, and description and justification for any connections to existing systems. The Designer shall submit copies of the HVAC Systems Alternatives form (EXHIBIT A-4-4) to both Mechanical and Energy Analysis Sections. A single-line layout of each of the three alternatives shall also be submitted to both sections. See paragraph 4.9.6.2.

(5) Brief description of various items of equipment. Indicate operating temperatures and capacities.

(6) Description of piping systems including type of pipe, insulation requirements, and whether concealed or exposed.

(7) Description of any demolition or asbestos removal required. See CHAPTER A-12, ASBESTOS IDENTIFICATION AND REMOVAL if asbestos is encountered.

(8) A list of items for which any additional criteria, clarification, or guidance is required.

(9) Return air plenums are not allowed. Ducted returns shall be provided unless the designer can provide compelling specific rationale that justifies the use of a return air plenum. A waiver request accompanied by detailed rationale and justification supporting a return air plenum shall be submitted through the project manager to the Savannah District Mechanical Team Leader in Design Branch. Waiver approval action is vested in Chief, Design Branch. Examples of compelling reasons or justification are energy related, life cycle cost, operational, and/or maintenance.

b. Plumbing.

(1) Criteria listing - manuals, codes, etc.

(2) Plumbing calculations as necessary to determine number of fixture units, cold and hot water capacity requirements, and equipment or capacities of miscellaneous and special systems.

(3) Fixture determination listing quantity and type of fixtures for both men's and women's toilets, and other fixtures such as drinking water fountains, service sinks, etc. Indicate male and female building population, if available.

(4) Description of domestic water heating and storage equipment, including capacity, type (gas, electric, boiler, water), materials, and insulation. (Life cycle cost justification will be provided with concept design analysis for justification of selection, if appropriate.)

(5) Piping types and location (concealed or exposed), together with material proposed and insulation requirements.

(6) Brief description of miscellaneous systems such as compressed air (capacity, pressure, piping, location of air outlets, etc.), roof drainage, natural gas (pressure, quantity, and equipment to be served), and other special systems.

(7) Description of any demolition or asbestos removal required. See CHAPTER A-12, ASBESTOS IDENTIFICATION AND REMOVAL if asbestos is encountered.

(8) A list of items for which additional criteria, clarification, or guidance is required.

c. Outside Utilities.

(1) Criteria listings - manuals, pamphlets, codes, etc.

(2) Pipe size calculations in tabular form. Where project utilities are extensions of existing systems, it must be shown that these are adequate for the additional load requirements.

(3) Description of the utility systems chosen. Provide justification for chosen systems based on life cycle cost analysis.

(4) Topographic Survey requirements for utility distribution routing shall be in accordance with CHAPTER A-1, SITE DEVELOPMENT, Paragraph 2.3.1.

(5) A list of items for which additional criteria, clarification, or guidance is required.

d. Fire Suppression System.

(1) Criteria listings - Except as modified herein, or by Specific Instructions, fire protection criteria shall conform to the requirements of Architectural and Engineering Instructions, MIL-HDBK-1190, MIL-HDBK-1008C, and to applicable standards contained in the current National Fire Codes, published by the National Fire Protection Association (NFPA).

(2) Listing of the hazard classifications for each space and discussion of protection requirements for specific hazards.

(3) Discussion of fire protection features to reflect the types of systems considered with a description of the systems selected.

(4) Description of fire detection and alarm system controls which are used to actuate suppression systems. See CHAPTER A-5, ELECTRICAL, for fire detection and alarm system requirements.

(5) If water sprinkler systems are to be provided, preliminary hydraulic calculations shall be prepared for the most hydraulically demanding area to insure that flow and pressure requirements can be met with current water supply. Information on water supply available for fire protection will generally be provided by Base personnel through "Fire Flow Test" data (see CHAPTER A-8, ENVIRONMENTAL).

e. Renovation Recommendations. The AE shall make all recommendations for renovation requirements in existing buildings and/or recommendations for the use of existing mechanical systems. Recommendations shall include all supporting rationale, assumptions, calculations, condition of existing equipment, etc.

4.5.2 Concept/Early Preliminary Drawings. Provide plan view showing the following:

a. Heating, Ventilating, and Air Conditioning. Heating, ventilating, and air conditioning equipment layout - chillers or refrigeration compressors, boilers, pumps, condensers or cooling tower, air handling units, fans, air distribution duct layout (may be single line), hoods, and other items of major equipment required for the facility. Return air plenums are not allowed. Ducted returns shall be provided.

b. Plumbing. Plumbing fixture layout, floor and area drains, and plumbing equipment layout (hot water generator, storage tank, air compressors, etc.).

c. Outside Utilities. Indicate locations and sizes of outside utilities, high temperature water, steam, chilled water, and natural gas lines where required to support the project. Show same scale as other sitework drawings.

d. Fire Suppression System. Prepare a plan for each floor of each building. Provide the following types of information:

(1) The location and coverage of any fire suppression systems (sprinkler risers, standpipes, etc.).

(2) The location of any other major fire suppression equipment.

(3) Indicate any hazardous areas and their classification.

e. Mechanical Room(s). A 1:50 scale plans in metric design (or 1/4 inch = 1 foot) of the mechanical room(s) indicating all equipment to be located therein with at least 1 meter (3 feet) of clearance between each item and the nearest adjacent wall/ceiling or electrical/control panel. Indicate space required for placement of all such items as coils, filters motors, belts, spaces on the plan. If electrical panels are located within the mechanical room, indicate the space around the panel where piping is prohibited by code. The Architect of record will be required to certify that adequate space for such equipment has been provided, on the Form contained in the Exhibits as Exhibit A-4-5. (See Chapter A-3, par. 3.4.3.4.)

4.5.3 Concept/Early Preliminary Specifications. Provide a list of specifications to be used for the project in accordance with CHAPTER A-11, SPECIFICATIONS.

4.5.4 Standard Drawings or Site Adaptations. Indicate all utility requirements as above and provide narrative and calculations for any other changes required for site adaptation or conformance to latest criteria.

4.5.5 Field Investigation. The AE shall make a complete and thorough field investigation prior to performing any design work on this project. This shall be done to verify conditions existing at the time of design compared to those shown on as-built drawings provided by the Project Manager. Any conflicts shall be reported to the Project Manager, Savannah District. The field investigation shall also determine the extent of mechanical renovation required in any existing building to accommodate the scope of this new project.

4.6 **PRELIMINARY (OVER THE SHOULDER) SUBMITTAL REQUIREMENTS**. No requirements for this section.

4.7 **PRELIMINARY (60 PERCENT) DESIGN SUBMITTAL REQUIREMENTS**.

4.7.1 Preliminary Design Analysis.

4.7.1.1 When only Concept/Early Preliminary and Final Design submittals are required, the Final Design Analysis will contain all information developed in the Concept/Early Preliminary narrative, organized as outlined in Concept/Early Preliminary (35 Percent) Design Submittal Requirements of this chapter under paragraph 4.4.1 entitled Concept/Early Preliminary Design Analysis, as well as that identified in this Section and paragraph 4.7, the Final (100 Percent) Design Submittal Requirements.

4.7.1.2 Base all new designs on the most economical plan consistent with the applicable publications listed in this manual. Cite the criteria references for all major design decisions.

4.7.1.3 Identify all references to standard texts, etc., for all major design decisions or assumptions not covered by criteria references.

4.7.1.4 All design analyses shall clearly show calculated capacities of all major items of mechanical equipment such as air handling units and coils, condensing units, water chillers, boilers, pumps, humidifiers, cooling towers, fans, hot water heaters and tanks. Pump heads will be estimated for preliminary design. Analyses shall show manufacturer's make and model number of equipment used for layout purposes, and shall show weights of major items of equipment. Include summaries of heating and cooling loads and, where applicable, show determination of water quantities and temperature rise or drop for hot water, chilled water, and condenser water. Show calculations for air on and off coils and develop air conditioning and/or heating process cycles on a standard psychrometric chart, showing each air conditioning, heating, ventilation, humidification, and dehumidification system.

4.7.1.5 For Preliminary design, all piping inside the building and ductwork need not be sized based on detailed calculations, but should show estimated sizes sufficiently accurate to prepare the Preliminary Cost Estimate.

4.7.1.6 The Preliminary Design Analysis shall include all items in the Concept Design Analysis and any necessary revisions. In addition, the following specific items shall be included when applicable:

a. Heating, Ventilating, and Air Conditioning.

(1) Calculations for heating and cooling loads will be made in accordance with the methods prescribed in the current Fundamentals Volume, ASHRAE Handbook and Products Directory. Computer-generated load calculations shall be used. Load calculation software must be ASHRAE-based and must be approved in advance by the Savannah District. For Bachelor Enlisted and Officer Quarters, air conditioning calculations will include a 10 percent safety factor; all others will be 5 percent unless justified by unusual

circumstances. Duct sizing calculations shall be presented on forms similar to those found in the SMACNA HVAC Systems Duct Design Manual.

(2) Boiler sizes will be based on calculated heat load, safety factors, piping losses, and pickup requirements. Selection of boilers will be based on "gross" rating. List in design analysis allowances made for safety factors, piping losses, etc.

(3) Mechanical Ventilation. When calculating fan capacities for ventilation purposes, show in the analysis the volume of the space to be ventilated and the number of the air changes per hour used. If fan capacity is based on heat liberated in the space, show all assumptions made along with computations. All calculations required by ASHRAE Standard 62-1989 shall be shown. This includes ventilation effectiveness and multiple space analysis if the ventilation rate procedure is used.

(4) Return air plenums are not allowed. Ducted returns shall be provided.

b. Outside Utilities.

(1) Exterior heat, gas, and chilled water distribution piping shall be sized for preliminary design. The analysis shall show flow quantities, pipe sizes, pressure drops per meter (or per 100 feet), total pressure drop, and initial and final pressures. Gas distribution analysis shall be prepared in accordance with TM 5-848-1.

(2) Expansion Loop Calculations. Expansion loop sizes shall be calculated for heat distribution and for low temperature heating water distribution systems. The entire distribution system shall be analyzed using a three-dimensional, finite element analysis program. Input, output and diagrams, indicating node locations shall be submitted. Loops shall provide adequate expansion on the straight runs of the system within the stress limits of ASME B31.1. Distance between guides on loops shall be equal to twice the width of the loop. Anchor distances shall not exceed 75 m (250 feet). Loops shall generally be formed of equal leg segments.

c. Fire Suppression System.

(1) Provide a detailed description of the system and its controls such as activation of the system, interlocks with the HVAC system, and connection to detection and alarm systems.

(2) For all water-based sprinkler systems protecting facilities over 280 m^2 (3000 square feet), pipe sizes will be developed by a complete hydraulic analysis in accordance with NFPA 13 and MIL-HDBK-1008B. Analysis may be computer-generated provided input and output can be verified to conform to the above. For Air Force Logistics Command facilities, calculations shall be performed by means of "HASS", the Hydraulic Analysis of Sprinkler Systems program available from HRS Systems of Atlanta, Ga.

d. HVAC Controls.

(1) Preliminary submittal must include HVAC controls data to EN-DM. If a Preliminary submittal is not required, this information will follow the approved

Concept/Early Preliminary submittal at least 4 weeks prior to scheduled Notice to Proceed on Final design. This data must be approved by EN-DM prior to proceeding with Final design of HVAC controls (see CHAPTER A-7, ENERGY ANALYSIS for HVAC controls Final design requirements). Data shall include the following:

(a) Revised cooling and heating load estimate based on Concept/Early Preliminary submittal review comments.

(b) Psychrometric chart depiction of the HVAC process.

(c) Sequence of control narrative to include, but not be limited to the following:

(i) Control of the air side of the HVAC system, including identification of system components.

(ii) Control of the water/refrigeration side of the system, including identification of system components.

(d) Single line schematic of typical HVAC unit, showing supply fan, return air fan (if any), coils, control valves, dampers (outside air, return air, relief air, face and bypass), smokestats, freezestats, firestats, averaging thermostats, discriminators, etc., with setpoints and functional/single line control cabling.

(2) Other Controls. Controls for boilers, chillers, and their auxiliaries located in central energy plants shall be in accordance with the specific instructions for each project.

4.7.2 Standard Computation Forms. Calculate heat losses, cooling loads (unless computer-generated load calculations are used), and expansion loops on standard Corps of Engineers forms which will be furnished upon request. These standard forms are as follows:

EXHIBIT NO.	TITLE OF FORM
EXH A-4-1	Typical Design Analysis Format for Closed Head Sprinkler System

4.7.3 Preliminary Drawings. The Preliminary drawings shall show all information given on the Concept/Early Preliminary drawings but in greater detail. In addition, the Preliminary drawings shall contain the following:

a. Floor plan layouts showing location and capacities of all items of mechanical equipment, piping, ductwork, and fixtures.

b. Enlarged plan of Mechanical Equipment Rooms. See paragraph 4.9.7.10. Technical Requirements, of this chapter. Equipment room layouts shall be sufficiently complete to show piping and duct layouts and access for maintenance. A minimum of 900 mm (36 inches) working clearance shall be provided around all major equipment items when depicting the largest of three manufacturer's standard unit dimensions.

c. Single line layout of ductwork and piping inside of building including all items of mechanical equipment and fixtures. Detailed piping schematic diagrams, details, sections, and elevations are not required for preliminary design unless required to show intent of design. Return air plenums are not allowed. Ducted returns shall be provided.

d. Equipment capacities shown on schedules similar in format to those shown in EXHIBIT A-4-3. Minimum efficiency shall be included in the schedule for pumps only. All other major equipment shall have maximum kilowatts (horsepower) listed in the schedule. Coordinate electrical requirements with the electrical designer. Do not specify equipment by trade name.

e. Plumbing fixture schedule listing individual fixtures and pipe size connections (cold water, hot water, and waste). Schedule shall be similar in format to EXHIBIT A-4-3.

f. Heat distribution plan showing location and sizes of lines and pits, pit equipment with capacities, anticipated grading of lines, and location and sizes of expansion loops and anchors.

g. Chilled water, domestic water, gas, and liquid fuel distribution plan showing location and size of distribution lines.

h. Any information other than the requirements listed above which the designer considers necessary to show the intent of design.

i. Fire Suppression System.

(1) Include items shown on the Concept/Early Preliminary drawings and any necessary revisions.

(2) Prepare a schedule describing the system with the following information: fire hazard and occupancy classifications, building construction type, L/min/m² (gpm/square foot) sprinkler density, area of operation, demand area, area of coverage/head, sprinkler spacing, and other as required.

(3) Provide detail of suppression system interface with HVAC and detection or alarm systems. Coordinate with CHAPTER A-5, ELECTRICAL.

4.7.4 Preliminary Specifications.

4.7.4.1 The outline specifications previously submitted for Concept/Early Preliminary phase shall be revised, updated, further developed and resubmitted in accordance with CHAPTER A-11, SPECIFICATIONS.

4.7.4.2 Prepare outline specifications for mechanical work included in the project. Where Savannah District or OCE guide specifications are to be used without change, a listing of the appropriate OCE guide specification numbers will suffice. Where a departure or addition to a guide specification is required, include in listing a brief description of the equipment or procedure constituting the departure or addition. Where no guide

specification is available, prepare an outline specification from available criteria and instructions, giving all pertinent equipment and material characteristics.

4.8 **FINAL (100 PERCENT) DESIGN SUBMITTAL REQUIREMENTS**.

4.8.1 Final Design Analysis.

4.8.1.1 The Final Design Analysis will be a refinement of the Concept/Early Preliminary and/or Preliminary Design Analyses and shall contain all the information called for in paragraphs 4.4 and 4.6 of this chapter, even when preliminary submittal is not required.

4.8.1.2 The design analysis will show applicable references for design assumptions not found in common reference manuals which were not listed during the Preliminary design stage.

4.8.1.3 The design analysis will reflect all comments from the District on the Concept/Early Preliminary and Preliminary Design Analyses.

4.8.1.4 All pipe sizing computations will be included in the analysis. Piping analyses will show design flow, pipe size, friction factors, slopes, lengths, and elevations where applicable, conducted quantity, and velocity in the various mains and branches. Where necessary, flow diagrams will be included in the analysis.

4.8.1.5 The determination of pump heads will be based on complete take off of friction losses and static heads.

4.8.1.6 The plumbing piping analysis will clearly show the main and branch loads in terms of "fixture units" as well as flow quantities L/min (gpm), supply pressure, and pressure available at all fixtures based on full flow conditions.

4.8.1.7 All duct sizing computations, presented on forms similar to SMACNA Form 1-77, will be included in the analysis. Ductwork analyses will show friction loss and will clearly indicate the air velocities encountered in the main ducts. Where necessary, flow diagrams will be included in the analysis. Return air plenums are not allowed. Ducted returns shall be provided.

4.8.1.8 The determination of static pressure on fans and air handling units will be based on complete take off of static losses. The values in the SMACNA HVAC Systems Duct Design Manual shall be allowed for dirty filters in the calculations. This value shall be included in the external pressure drop on the air handling unit schedule.

4.8.1.9 Heating, air conditioning, and ventilating analyses will include a summary sheet to show the final capacity of each piece of equipment including the manufacturer's make and model used for layout. The weight of each of the items of equipment will be included in this summary.

4.8.1.10 The Final design analysis shall include a complete sprinkler system layout with pipes sized. Fire extinguishment systems will include hazard classification, sprinkler spacing, zoning (if appropriate), and sizes of all riser pipes, sprinkler valves, mains, and

principle branches based on available water pressures by either computer-generated hydraulic analysis, manual calculations, or sizes taken from NFPA pipe schedule tables. System design shall be by hydraulic calculation unless total area is less than 280 m^2 (3,000 square feet) (no pipe schedule system). Smoke evacuation systems will be thoroughly developed in accordance with project specific instructions when required. See paragraph 4.7.2.12 for fire protection information to show on drawings.

4.8.1.11 P.O.L. systems will be fully developed in accordance with project specific instructions when required.

4.8.2 Final Drawings.

4.8.2.1 Final plans will be the refinement and completion of Concept/Early Preliminary and Preliminary drawings. All comments from this office relating to Concept/Early Preliminary and Preliminary design shall be incorporated in the Final drawings.

4.8.2.2 Where crowded conditions exist due to close proximity of other phases of the work, sufficient sections and elevations will be shown to indicate clearly the exact location of the particular item in relation to other items. As a minimum, one section will be taken through the most congested area of each mechanical room.

4.8.2.3 The number of elevations and details will be sufficient to allow construction and installation of the work without additional design work by the Contractor.

4.8.2.4 Where equipment connection details are shown, indicate all required valves, gauges, and fittings required. Coordinate with specification requirements and make sure that valves, fittings, etc., that are specified to be furnished with each piece of equipment are included in the detail.

4.8.2.5 Equipment room plans will clearly indicate by dotted lines, the space required for "tube pulling" on such items as boilers, chillers, condensers, etc. Sufficient room will be allowed for maintenance, coil removal, filter removal, etc., on other items of equipment. Space reserved by code at electrical panels shall also be shown.

4.8.2.6 Final plans shall show all pipe and duct sizes. Ductwork will be drawn to scale on plans. Catwalks, ladders, platforms, access panels, and doors required for operation and maintenance of equipment, valves, and accessories will be detailed on the drawings.

4.8.2.7 Performance characteristics for all items of mechanical equipment will be placed in carefully prepared equipment schedules. Schedules will be similar in format to those shown in EXHIBIT A-4-3. Equipment characteristics specified in "Note" fashion, or in random locations on the drawings are not acceptable. Equipment characteristics selected shall not be restrictive to any one manufacturer but must be competitive among at least three major manufacturers. No manufacturers' trade names shall be shown on the drawings.

4.8.2.8 Electrical characteristics will not be included in equipment schedules. Minimum efficiency shall be included in the schedule for pumps only. All other major equipment (1.1

kw or more) shall have maximum kilowatts (horsepower) listed in the schedule. See CHAPTER A-7, ENERGY ANALYSIS.

4.8.2.9 Location of equipment, piping, and ductwork shall be completely coordinated with other features of the project - architectural, structural, electrical, etc.

4.8.2.10 Riser diagrams of soil, waste, drain, and vent stacks, and water risers will be shown on the drawings for all buildings two stories and higher.

4.8.2.11 Where critical, the air suction and discharge directions of such items as fans, air-cooled condensers, and cooling towers will be indicated on the drawings. Make sure that building fresh air intakes are located at a sufficient distance away from the air discharge of air-cooled condensing units, cooling towers, etc., as to preclude pick up of this air into the fresh air intake.

4.8.2.12 Include Fire Protection drawings in Final package. "Critical Projects" identified in paragraph 4.9.7.4 shall have a fully detailed design of all extinguishment systems. These are not necessarily "working plans" but shall provide the Contractor actual pipe sizes, sprinkler locations, and approximate pipe locations. All major equipment shall be located and sized. For other projects, label fire protection drawings "PRELIMINARY", and provide densities, demand area, area protected, hazard classification, sprinkler head coverage, zoning, building entrances, exact control system locations (must include all locations if shown), device locations, etc. Anything shown must be correct as to numbers and approximate as to locations and sizes for "noncritical projects."

4.8.2.13 Heat distribution, liquid fuel distribution, and chilled water distribution drawings will have complete profiles for the entire length of run. These profiles will indicate elevations, depth of bury, and all interfering utilities which may be encountered. Details of pits, drip points, etc., will be shown. Where required to clearly define the requirements, profiles as specified above will be provided for gas distribution systems.

4.8.3 Final Specifications.

4.8.3.1 Typed project specifications shall be submitted in accordance with CHAPTER A-11, SPECIFICATIONS.

4.8.3.2 Specifications will not be restrictive. Generally, the description will be such that at least three manufacturers can meet the specified requirements. Do not use trade names in the specifications.

4.8.3.3 Specifications for fire suppression systems shall be CEGS adapted for the project. Components such as smoke detectors, heat actuated devices, and control panels for a Halon system shall be specified in the Fire Suppression specifications.

4.8.3.4 The subparagraphs on "Electrical Work" shall be carefully coordinated with the electrical section of the specifications. There shall be no conflicts as to which section covers starters, controls, or wiring, and no conflicts as to the type of starters required for the individual items of equipment.

4.8.3.5 The Designer shall refer to CHAPTER A-7, ENERGY ANALYSIS, for specification requirements for HVAC Control Systems.

4.8.3.6 Particular care will be given to the compatibility of components, for example, the burner should suit the boiler; the combustion controls should suit the oil type and burner type selected.

4.9 **CORRECTED FINAL DESIGN SUBMITTAL REQUIREMENTS**.

4.9.1 Notice. Corrected Final submittals are not considered a normal design level and are required only when Final submittals must be revised or corrected due to error or omission.

4.9.2 Compliance. The comments generated during the Final Design review shall be incorporated in the Corrected Final submittal.

4.10 **REQUIREMENTS FOR DESIGN/BUILD RFP PACKAGES.** To be furnished by specific instructions to the contract or delivery order.

4.11 **TECHNICAL REQUIREMENTS**.

4.11.1 Statement of Work. Mechanical work includes, but is not limited to, the design of the following systems:

a. Air Conditioning.
b. Compressed Air.
c. Emergency Engine-Generator Units.
d. Extinguishment Systems.
e. Gas Distribution and Gas Fittings.
f. Heating.
g. Hoists and Lifts.
h. Incinerators.
i. Ventilation for Equipment Rooms.
j. Mechanical Equipment Spaces.
k. Plumbing.
l. Refrigeration.
m. Chilled and Low Temperature Heating Water Distribution.
n. Heat Distribution.
o. Liquid Fuel Storage, Distribution, and Dispensing.
p. Seismic Protection.

4.11.2 Basic Technical Requirements. TI 800-01, Design Criteria, 20 July 1998.

4.11.3 Coordination of Work.

4.11.3.1 Coordinate space requirements, foundations, supports, duct and pipe routing, electrical service, and the like for mechanical items with architectural, structural, and electrical design elements.

4.11.3.2 Coordinate exterior mechanical distribution systems with design elements handling other exterior utility designs and sitework.

4.11.3.3 All piping and ductwork will be concealed in habitable areas of all Army buildings, except storage or service facilities, as well as utility and medical storage spaces in hospitals.

4.11.4 Supplementary Technical Manuals (TM) and Engineering Technical Letters (ETL). Additional technical manuals and letters will be requested by the Designer for each project. These manuals and letters will supplement those cited in paragraph Basic Technical Requirements. In case of conflict between manuals, the manuals cited in paragraph Basic Technical Requirements will govern. See paragraph APPLICABLE PUBLICATIONS for a list of applicable Technical Manuals.

4.11.5 Guide Specifications. The appropriate sections of guide specifications will be requested by the Designer initially and again at the Preliminary design stage for each project. The Designer shall read each before design is started and pay special attention to the TECHNICAL NOTES included with each section of guide specifications. The specifications and notes reflect criteria that must be incorporated in the design.

4.11.6 System Selection.

4.11.6.1 Full engineering considerations shall be given to achieve greater operating economics by the use of one or more of the several proven energy conservation systems. Several considerations to achieve energy conservation are described in Architectural and Engineering Instructions. See CHAPTER A-7, ENERGY ANALYSIS.

4.11.6.2 The AE shall evaluate the following design alternatives of a life cycle cost basis.

a. Alternative domestic hot water heating systems.

b. Extension of existing high temperature water, steam, or chilled water distribution systems to serve this facility versus self-contained systems.

c. Building HVAC Systems Selection: The AE shall carefully evaluate all of the project criteria and use good engineering judgement to select HVAC system alternatives which are compatible with the facility. Multizone, dual duct, terminal reheat, fan coil, all types of variable air volume systems, and combinations of systems shall be considered. The AE shall contact Mechanical Section, Design Branch, for approval of alternatives to receive life cycle costing prior to computerized energy analysis as required by Chapter A-7, Energy Analysis. Return air plenums are not allowed. Ducted returns shall be provided.

d. Special Fire Suppression Systems.

4.11.7 Standard Systems Criteria.

4.11.7.1 Air Conditioning.

4.11.7.1.1 Outside Design Conditions. Listed in EXHIBIT A-4-2 are outside design conditions for Army and Air Force installations. The listing includes conditions for air conditioning system design, water cooling tower design and selection, and selection of air-cooled condensers. These conditions will be used unless stated otherwise in Specific Instructions.

4.11.7.1.2 Inside Design Conditions. Unless stated otherwise in Specific Instructions, inside design conditions shall be as required by TM 5-810-1.

4.11.7.1.3 Year-Round Cooling Requirements. If an air conditioning system serves areas having high internal heat gains (such as electronic equipment areas), considerations must be given to possible year-round cooling requirements and the system designed accordingly; this will include provisions for low ambient operation of air-cooled condensers; or if permitted, the use of an outside air economizer cycle. Provisions for reheating of supply air should be provided where justified.

4.11.7.1.4 Reliability, redundancy, and other requirements for air conditioning of Communications-Electronic installations will be in accordance with TI 800-01 and MIL-HDBK-1190 criteria will govern in the design of these types of installations.

4.11.7.1.5 Additional criteria required for proper design of special facilities will be given in specific instructions.

4.11.7.1.6 Air conditioned existing buildings, having attic spaces with insulation on the ceiling, shall be provided with mechanical ventilation to maintain a maximum of 5.56 degrees C (10 degrees F) above ambient in the attic space. No existing facility with attic space will be air-conditioned unless insulation is added to the ceiling to bring the roof/ceiling assembly thermal resistance factor into conformance with current criteria. Return air plenums are not allowed. Ducted returns shall be provided unless the designer can provide rationale substantiating that adequate space is not available in the existing facility being renovated to allow a ducted return to be installed. Waiver requests must be submitted through the Savannah District Mechanical Team Leader to Chief, Design Branch.

4.11.7.1.7 Automatic Heating and Cooling Changeover Controls. Outdoor sensing unit and controls shall be located where they will not sense heat generated by mechanical or electrical equipment. They shall not be located in the outside air intakes and exhaust air streams of mechanical equipment rooms where they can be affected. Automatic changeover is permitted where there is a building central heating and air conditioning system, provided the changeover control is based on sensing outside air temperatures.

4.11.7.1.8 Fire Protection. The current requirements of NFPA 90A and 90B will be incorporated in all heating and air conditioning systems designs except that corridors shall not be used as a supply, return, or exhaust air plenum in any type of occupancy.

4.11.7.1.9 Noise and Vibration Control. All noise control design work shall be in accordance with TM 5-805-4 and the ASHRAE Applications Handbook.

4.11.7.1.10 Ductwork Design. Ductwork shall be designed in accordance with ASHRAE recommendations and applicable SMACNA standards. Variable air volume systems shall have ducts sized by the Static Regain Method.

4.11.7.1.11 For Air Force projects, a "kJ" ("Btu") meter shall be provided at the point of entry for any new building or major building renovation that is to be served from a central chilled water plant. The meter shall be commercially available and sense chilled waterflow and temperature differential from which it shall automatically calculate and record Btu's.

4.11.7.1.12 Humid Areas. Reference TI 800-01, Chapter 13, for additional requirements for humid areas. Humid areas are indicated in EXHIBIT A-4-2.

4.11.7.2 Compressed Air. Unless requirements are stated in Specific Instructions, compressed air system and compressor sizes will be determined by the Designer from analysis of equipment layout and/or coordination with using service requirements.

4.11.7.3 Emergency Engine-Generator Units.

4.11.7.3.1 General. This feature must be coordinated with the electrical design element. A single set of specifications will be prepared to specify the unit and auxiliary equipment. The Mechanical Designer shall be responsible for plans and specifications covering the engine, fuel system, exhaust, and cooling system. The electrical designer will be responsible for the design and specification of the generator and other electrical appurtenances and controls. If a gasoline engine is used, the design shall conform to applicable NFPA codes; i.e., fueling systems, hazardous area classification, etc.

4.11.7.3.2 Ventilation for Emergency Engine-Generator Rooms. The ventilating air quantity shall be sufficient to hold the room temperature at approximately 48.9 degrees C (120 degrees F.) with a maximum of 51.67 degrees C (125 degrees F). The following heat dissipation rates will be used in calculating ventilation rate:

a. Heat given off by generator and exciter - 188 W/kW (8 Btu/min/kW per minute).

b. Heat given off by engine surfaces (either dry or water-cooled manifold) - 235 W/kW (10 Btu per minute per HP).

c. Heat given off by exhaust system - Initial surface temperatures of 415 C - 510 C (750 degrees F. to 950 degrees F.) for engines with water-cooled manifolds.

4.11.7.4 Extinguishment Systems.

4.11.7.4.1 General.

a. Savannah District has identified the following as "critical projects." Additional projects or deviations from this classification shall be designated in writing by both the District Fire Protection Engineer and the Chief, Design Branch.

(1) Medical facilities.

(2) Aircraft maintenance and storage facilities.

(3) Engine test cells/areas.

(4) Missile assembly facilities/areas.

(5) Ordinance facilities or exposed explosive areas.

(6) Facilities which include significant data processing/telecommunication systems, as defined by AR 380-380.

(7) POL facilities.

(8) Flight Simulators/Computer based training facilities.

(9) Warehouses with high piled or high rack storage.

(10) JSOC/SOTF facilities.

(11) Mission essential facilities.

(12) Any facility occupied (during normal working or sleeping times) by 100 or more persons.

b. The design analysis for sprinkler systems shall be in strict accordance with the instructions, engineering manuals, and requirements of NFPA 13. For design of all water-based systems serving an area of over 280 m² (3,000 square feet), a complete hydraulic analysis is required. All automatic sprinkler designs shall be based on 1/2 inch nominal size orifice nozzles. Drawings for any extinguishing system shall maximize criteria (Governmental criteria differs significantly from commercial) to avoid conflicts.

4.11.7.4.2 Critical Projects. All critical projects require a "fully detailed design" of active fire protection systems. All piping shall be sized and heads shown on the contract drawings. Sections shall be shown for all ceiling/roof constructions to indicate head and pipe arrangements. Specifications shall be edited to require "GA" level review of all shop drawings and observation of all field testing required in connection with final approval of these systems. The Contractor shall be required to provide full size 841 x 1189 mm (30" x 42") as-built drawings as part of his construction submittals. These as-built drawings shall be complete in all aspects, including wiring diagrams, piping layouts, equipment details, schedules, etc. In addition, the District Fire Protection Engineer shall review all complete final extinguishment system designs and provide formal approval action for inclusion in the EN-S project files.

4.11.7.4.3 Other Projects. Plans developed for sprinkler systems shall be of the preliminary layout type which conform to NFPA 13. They are to be a guide for subsequent preparation by the Contractor of detailed working drawings which will be coordinated with requirements and options of the work of other trades required for construction of the facility. A note to this effect shall be placed on the preliminary plan. Risers, fire department connections, etc., shall be appropriately detailed. However, exact sprinkler

head locations, branch and pipe lateral sizes, etc., will not be indicated in detail. A typical section/elevation of the sprinkler system will be provided to indicate orientation of sprinkler heads in attic spaces, under sloped roofs, etc.

4.11.7.5 Gas Distribution and Gas Fittings. Gas distribution system will extend from point of connection with existing main to a point 1.5 m (5 feet) from the building. Gas fitting connects at the 1.5 m (5-foot) mark and covers all interior gas piping. Maximum line pressure in gas distribution systems shall be 345 kPa (50 psig) in lieu of 172 kPa (25 psig) specified in TM 5-848-1. The system will be designed such that there will be no exposed gas lines or meters in the front of the facility, and coordinated with the User.

4.11.7.6 Heating.

4.11.7.6.1 Outside Design Conditions. Listed in EXHIBIT A-4-2 are outside heating design conditions for Army and Air Force installations. These conditions will be used unless stated otherwise in specific instructions.

4.11.7.6.2 Inside Design Conditions. Unless stated otherwise in specific instructions, the inside design temperature shall be determined as required by TM 5-810-1.

4.11.7.6.3 Energy Source Selection. Energy Source selection shall be based on criteria contained in Chapters 13 and 14 of the A-E Instructions.

4.11.7.7 Hoists and Lifts.

4.11.7.7.1 Hoists. The mechanical designer shall determine lifting and travel speeds for motor operated hoists, trolleys, and cranes. The determinations shall be based on job requirements and will be in conformance with standard catalog products of at least three reputable manufacturers. Electrical requirements will be coordinated with electrical drawings. Monorail supports will be designed by the structural engineer and shown on structural drawings.

4.11.7.7.2 Lifts. Automotive lifts shall conform to the latest issue of FS OO-L-0360. The lift will be detailed on the drawings. Show on the drawings the necessary control dimensions such as lift center line and location of front of lift with respect to building wall. Also, show drainage piping which will connect pit drainage to building.

4.11.7.8 Incinerators. In accordance with Air Pollution Abatement Policy, incinerators shall be provided which will meet the latest Federal and State regulations.

4.11.7.9 Ventilation for Equipment Rooms.

4.11.7.9.1 Refrigerant Compressor Rooms for Walk-in and Reach-in Refrigerators. Air-cooled condensing units with integral condensers will be provided with not less than 500 L/s of air per kW (800 CFM of air per horsepower) (nameplate rating). Water-cooled condensers and remote air-cooled condensers will be provided with not less than 50 L/s of air per kW (80 CFM of air per horsepower) (nameplate rating). Compressor rooms will be provided with outside air intake louvers and thermostatically controlled exhaust fans.

4.11.7.9.2 Mechanical equipment and laundry (laundromat) rooms will be provided with outside air intake louvers and a thermostatically controlled fan. The fan will have a two-speed motor and will be sized to provide not less than 20 air changes per hour during summer operation and approximately 10 air changes per hour during winter operation.

4.11.7.9.3 Gas-fired Furnaces. The following NFPA Code 54 guidance will be used:

a. Provide combustion air as required by two permanent openings to the outside. Openings will communicate directly, or by duct, to the outside. One opening will be within 300 mm (12 inches) of the top of the Furnace Room and one opening will be within 300 mm (12 inches) of the bottom of the Furnace Room. Openings directly to the outside or ducted vertically to the outside will give a minimum free area of 25 mm^2 per 1175 W (1 square inch per 4,000 BTUH) input rating for all equipment. Openings ducted horizontally to the outside will have a minimum free area of 25 mm^2 per 586 W (1 square inch per 2,000 BTUH) input rating.

b. All return air will be ducted to the furnace. The furnace room will not be used as a return.

4.11.7.10 Mechanical Equipment Spaces. Mechanical equipment (sized from three manufacturers), piping, and accessories in boiler and equipment rooms will be drawn to scale on the drawings in both plan and elevations. Adequate space will be provided for maintenance, operation, and replacement of equipment, piping, and accessories. Catwalks, ladders, platforms, access panels, and doors required for operation and maintenance of equipment, valves, and accessories will also be indicated and detailed on the drawings.

4.11.7.11 Plumbing.

4.11.7.11.1 Wall Hydrants and Lawn Faucets. The maximum spacing between wall hydrants or between lawn faucets around the perimeter of a building is 60 m (200 feet). Add 18 L/min (5 gpm) for each hydrant or faucet to building load for sizing water main. No diversity will be assumed.

4.11.7.11.2 Roof Drainage. Gutters and exterior downspouts will be sized by architectural design element, shown on the architectural drawings, and specified in architectural sections of the specifications. Roof drains and interior downspouts, including collection system, shall be sized by mechanical designer, shown on the mechanical drawings, and specified in the plumbing section of the mechanical specifications.

4.11.7.11.3 Wash Rack Drainage Facility. All wash racks shall be provided with suitable grease and sediment traps. The effluent from wash racks shall be provided with grit chambers and oil separators. The wash rack effluent will be discharged into storm drains or sanitary sewers as required by E.P.A. regulations.

4.11.7.11.4 Design for the Physically Handicapped. Appropriate modifications to plumbing fixtures, as required by Uniform Federal Accessibility Standard (UFAS), shall be included in all projects designated to be suitable for access by the physically handicapped.

4.11.7.11.5 Domestic Hot Water Temperature.

a. Domestic hot water supply maximum temperatures at the point of use will be as required in TM 5-810-5 unless higher temperatures are required for sanitizing and special processes.

b. Design guidance in TM 5-810-5 and ASHRAE Handbook HVAC applications, service water heating will be followed.

4.11.7.11.6 Connection of Potable Water Supply with Utility Systems Having Chemical Treatment Facilities. When a potable water supply is connected with a utility system such as heating system, chilled water system, or cooling tower, which is equipped with chemical treatment facilities, a reduced pressure principle backflow prevention device shall be provided. The positive break should occur between the potable water supply and the utility system. The drain line from the backflow assembly shall be run to a floor drain. The backflow assembly shall not be installed over 1500 mm (5 feet) above the floor for maintenance access.

4.11.7.12 Refrigeration.

4.11.7.12.1 Coordinate walk-in cooler and refrigerated space requirements with architectural drawings.

4.11.7.12.2 Provide defrost and drainage facilities for units.

4.11.7.12.3 Provide ample ventilation for compressor rooms as hereinbefore specified in paragraph 4.11.7.9.1.

4.11.7.13 Chilled and Low Temperature Heating Water Distribution. The chilled water and low temperature heating water distribution systems will extend from connection to existing exterior mains to a point approximately 600 mm (2 feet) inside the mechanical equipment room where both the supply and return lines shall terminate with shutoff valves. The building chilled or low temperature heating water system will connect to the distribution system at this point. A valved bypass will be installed on the distribution side of the shutoff valves. The amount of distribution piping between the equipment room wall or floor and the shutoff valves will be held to a minimum but will be of sufficient length to allow installation of the bypass.

4.11.7.14 Heat Distribution. Heat distribution system includes the exterior distribution of steam and high temperature water and will extend from connection to existing exterior mains to a point approximately 600 mm (2 feet) inside the mechanical equipment room where both the supply and return lines shall terminate with shutoff valves. The building systems will connect to the distribution system at this point. For high temperature water systems, a valved bypass will be installed on the distribution side of the shutoff valves. The amount of distribution piping between the equipment room wall or floor and the shutoff valves will be held to a minimum but will be of sufficient length to allow installation of the bypass. The heat distribution system shall enter the mechanical equipment room in close proximity to an exterior door to allow easy access to the shutoff valves from the door.

4.11.7.15 Liquid Fuel Storage, Distribution, and Dispensing.

4.11.7.15.1 In accordance with Air Pollution Abatement (Environmental) Policy, the following requirements will apply:

a. Fuel tanks of 151 416 L (40,000 gallon) capacity or more for storing gasoline or other organic liquids with a vapor pressure of 10.34 kPa (1.5 psi) absolute or greater under actual storage conditions shall either be of nonvented construction, designed for maximum pressure expected, or else equipped with floating roof or a vapor recovery system.

b. Stationary gasoline storage tanks of 900 L (250 gallons) or more shall be equipped with either submerged filling inlets or with vapor recovery systems such that loss of vapor to the atmosphere during filling operations shall be minimized.

c. Gasoline or petroleum distillate tank car or truck loading facilities handling 75 708 L (20,000 gallons) per day or more shall be equipped with submergible filling arms or other vapor emission control systems.

4.11.7.15.2 Aviation fuel tanks of steel construction will be interior lined with an epoxy coating system conforming to MS MIL-C-4556, minimum thickness of the two coats, 0.15 mm (6 mils). Interior metal surfaces will be sandblasted to bright metal prior to coating, in accordance with the requirements of "Steel Structure Painting Council Surface Preparation Specification," SSPC-SP5-91 No. 5. Work must be accomplished by experienced lining applicators.

4.11.7.16 Seismic Protection. All projects will include appropriate provision for protection of mechanical piping, equipment, and underground utilities against damage from seismic events in accordance with TM 5-809-10 (AFM 88-3, Chapter 13), Seismic Design for Buildings. Generally, these requirements can be satisfied by the inclusion of Guide Specification, Section 13080 SEISMIC PROTECTION FOR MECHANICAL, ELECTRICAL EQUIPMENT, in the contract specifications. See "Instructions to the Specification Writer" contained within the guide for high rise buildings, unstayed stacks, storage tanks, etc.

4.11.7.17 Other Systems. Other systems are required for special projects such as medical and industrial type facilities. These will be designed in accordance with the Specific Instructions issued for each project of this type.

CHAPTER A-4

MECHANICAL

EXHIBITS

A-4-1 Typical Design Analysis Format for Closed Head Sprinkler System

A-4-2 Heating and air-conditioning Outside Design Conditions for Savannah District Sites

A-4-3 Sample Mechanical Equipment Schedules

A-4-4 HVAC System Alternatives

A-4-5 Savannah District Certificate for Design of Mechanical Room

TYPICAL DESIGN ANALYSIS FORMAT
FOR CLOSED HEAD SPRINKLER SYSTEM

PROJECT: _____ LOCATION: _____

HAZARD: _____ TYPE SYSTEM: _____

NFPA STANDARD NO.13 REQUIREMENTS:

MAX. ALLOWABLE HEAD COVERAGE (SQ. FT./HEAD) _____
(mm^2/HEAD) _____

MAX. DISTANCE BETWEEN BRANCH LINES: _____

MAX. DISTANCE BETWEEN SPRINKLERS ON LINES: _____

PROJECT DESIGN:

AREA PROTECTED PER SYSTEM: _____

TOTAL HEADS PER SYSTEM: _____

HEAD COVERAGE (SQ.FT./HEAD) or (mm^2/HEAD) _____

DISTANCE BETWEEN BRANCH LINES: _____

DISTANCE BETWEEN SPRINKLERS ON LINES: _____

PIPE SIZING SCHEDULE:

NUMBER HEADS	PIPE SIZE	LINE SERVICE
1 2 3 ETC.		

HEATING AND AIR CONDITIONING OUTSIDE DESIGN CONDITIONS

FOR SAVANNAH DISTRICT SITES
(Source - Army TM 5-785, July 1978)

LOCATION	HDD	CDD	HEATING DESIGN CONDITIONS	COOLING DESIGN CONDITIONS		AIR COOLED COND. DESIGN CONDITION
			DRY BULB (F)	DB (F)	WB (F)	DRY BULB (F)
Albany NAS, GA	1793	2631	29	95	76	97
Athens, GA	297	1722	22	92	74	94
Atlanta, GA	3095	1589	22	92	74	94
Brunswick, GA **	176	2423	29	91	78	93
Columbus, GA	2378	2143	25	94	76	95
Dobbins AFB, GA	3273	1611	21	92	74	94
Ft. Benning, GA	2406	2203	24	93	76	95
Ft. Gordon, GA	2547	1995	23	95	76	97
Ft. McPherson, GA	3095	1589	22	92	74	94
Ft. Stewart, GA **	1713	2414	26	93	77	95
Hunter AAF, GA **	2029	2372	27	91	77	93
Macon ANG, GA	2240	2294	26	96	75	98
McCollum ANG, GA	3273	1611	21	92	76	94
McKinnon ANG, GA **	1331	2774	32	89	78	92
Moody AFB, GA	1549	2716	31	94	77	78
Moultrie/Spence, GA	160	2513	30	95	77	97
Robins AFB, GA	2244	2276	25	93	76	96
Rome/Russell, GA	3342	1615	22	94/93	76	94
Savannah, GA **	2029	2372	27	91	77	93
Savannah MAP, GA **	1952	2317	27	93	77	96
Statesboro, GA **	1952	2317	27	93	77	96
Badin ANG, NC	3218	1596	22	93	74	95
Camp Lejeune, NC	2901	1810	23	90	79	93
Charlotte, NC	3218	1596	22	93	74	95
Cherry Point, NC	2832	1922	24	90	78	92
Edenton, NC	3082	1622	22	91	77	93
Elizabeth CGAS, NC	3207	1593	22	91	77	93
Ft. Bragg, NC	3105	1760	21	92	76	94
Ft. Fisher AFS, NC **	2353	1901	29	87	77	89
Greensboro, NC	3825	1341	18	91	73	93
Pope AFB, NC	3122	1828	20	92	76	95
Raleigh, NC	3514	1394	20	92	75	94
Roanoke R. AFS, NC	3850	1492	16	93	76	96
S. Johnson AFB, NC	3124	1769	21	91	76	94
Sunnypoint MOT, NC **	2353	1901	29	87	78	89
Wadesboro ANG, NC	3058	1679	22	93	74	95
Winston-Salem, NC	3679	1546	20	91	73	94
Aiken AFS, SC	2348	2012	25	92	75	94
Beaufort MCAS, SC **	2126	2294	27	92	78	94
Charleston AFB, SC **	2146	2078	27	91	77/78	93
Columbia, SC	2598	2087	24	95	75	97
Florence MAP, SC	2566	1952	25	92	77	94
Ft. Jackson, SC	2598	2087	24	95	75	97
McEntire, ANG, SC	2828	1781	23	92	76	95
Myrtle Beach, SC **	2696	1823	24	89	78	91
Parris Island, SC **	2126	2294	27	92	78	94
Shaw AFB, SC	2453	2160	22	92	76	95
Sumter, SC	2482	2078	22	92	76	95
Ft. Buchana. PR **	0	4982	66	88	77	89

* Values given here are for normal design work. For critical facilities, confirm design conditions with Savannah District.

** Humid area

HEATING AND AIR CONDITIONING OUTSIDE DESIGN CONDITIONS

FOR SAVANNAH DISTRICT SITES
(Source - Army TM 5-785, July 1978)

LOCATION	HDD	CDD	HEATING DESIGN CONDITIONS	COOLING DESIGN CONDITIONS		AIR COOLED COND. DESIGN CONDITION
			DRY BULB °C	DB (C)	WB (C)	DRY BULB (C)
Albany NAS, GA	1793	2631	-1.67 °C	35 °C	24.44 °C	36.11 °C
Athens, GA	2975	1722	-5.56	33.33	23.33	34.44
Atlanta, GA	3095	1589	-5.56	33.33	23.33	34.44
Brunswick, GA	1765	2423	-1.67	32.78	25.56	33.89
Columbus, GA	2378	2143	-3.89	34.44	24.44	35
Dobbins AFB, GA	3273	1611	-6.11	33.33	23.33	34.44
Ft. Benning, GA	2406	2203	-4.44	33.89	24.44	35
Ft. Gordon, GA	2547	1995	-5	35	24.44	36.11
Ft. McPherson, GA	309	1589	-5.56	33.33	23.33	34.44
Ft. Stewart, GA	1713	2414	-3.33	33.89	25	35
Hunter AAF, GA	2029	2372	-2.78	32.78	25	33.89
Macon ANG, GA	2240	2294	-3.33	35.56	23.89	36.67
McCollum ANG, GA	3273	1611	-6.11	33.33	24.44	34.44
McKinnon ANG, GA **	1331	2774	0	31.67	25.56	33.33
Moody AFB, GA	1549	2716	-.56	34.44	25	25.56
Moultrie/Spence, GA	1640	2513	-1.11	35	25	36.11
Robins AFB, GA	2244	2276	-3.89	33.89	24.4	35.56
Rome/Russell, GA	3342	1615	-5.56	34.44	24.44	34.44
Savannah, GA **	2029	2372	-2.78	32.78	25	33.89
Savannah MAP, GA **	1952	2317	-2.78	33.89	25	35.56
Statesboro, GA **	1952	2317	-2.78	33.89	25	35.56
Badin ANG, NC	3218	1596	-5.56	33.89	23.33	35
Camp Lejeune, NC	2901	1810	-5	32.22	26.11	33.89
Charlotte, NC	3218	1596	-5.56	33.89	23.33	35
Cherry Point, NC	2832	1922	-4.44	32.22	25.56	33.33
Edenton, NC	3082	1622	-5.56	32.78	25	33.89
Elizabeth CGAS, NC	3207	1593	-5.56	32.78	25	33.89
Ft. Bragg, NC	3105	1760	-6.11	33.33	24.44	34.44
Ft. Fisher AFS, NC **	2353	1901	-1.67	30.56	25	31.67
Greensboro, NC	3825	1341	-7.78	32.78	22.78	33.89
Pope AFB, NC	3122	1828	-6.67	33.33	24.44	35
Raleigh, NC	3514	1394	-6.67	33.33	23.89	34.44
Roanoke R. AFS, NC	3850	1492	-8.89	33.89	24.44	35.56
S. Johnson AFB, NC	3124	1769	-6.11	32.78	24.44	34.44
Sunnypoint MOT, NC **	2353	1901	-1.67	30.56	25.56	31.67
Wadesboro ANG, NC	3058	1679	-5.56	33.89	23.33	35
Winston-Salem, NC	3679	1546	-6.67	32.78	22.78	34.44
Aiken AFS, SC	2348	2012	-3.89	33.33	23.89	34.44
Beaufort MCAS, SC **	2126	2294	-2.78	33.33	25.56	34.44
Charleston AFB, SC **	2146	2078	-2.78	32.78	25	33.89
Columbia, SC	2598	2087	-4.44	35	23.89	36.11
Florence MAP, SC	2566	1952	-3.89	33.33	25	34.44
Ft. Jackson, SC	2598	2087	-4.44	35	23.89	36.11
McEntire, ANG, SC	2828	1781	-5	33.33	24.44	35
Myrtle Beach, SC **	2696	1823	-4.44	31.67	25.56	32.78
Parris Island, SC **	2126	2294	-2.78	33.33	25.56	34.44
Shaw AFB, SC	2453	2160	-5.56	33.33	24.44	35
Sumter, SC	2482	2078	-5.56	33.33	24.44	35
Ft. Buchana. PR **	0	4982	18.88	31.11	25	31.67

* Values given here are for normal design work. For critical facilities, confirm design conditions with Savannah District.

** Humid area

SAMPLE MECHANICAL SCHEDULES

IF DESIGN IS TO BE IN METRIC USE THE SI UNITS, IF DESIGN IS IN INCH/POUND UNITS USE ONLY THE INCH POUND UNITS IN THE SCHEDULE, EVEN THOUGH BOTH UNIT ABBREVIATIONS ARE SHOWN IN THE EXAMPLES.

AIR COMPRESSOR SCHEDULE

ITEM	SCFM (M^3/s)	AIR PRESSURE PSIG (kPa)	RECEIVER GALLON (LITER)	REMARKS
AC-1	50	125 psig	60 gal. Horizontal	Receiver Mounted Compressor

CHILLER SCHEDULE

SYMBOL	CAPACITY TONS (kW)	GPM (L/S)	ENT. WATER TEMP °F (C)	TEMP. DIFFERENCE °F (°C)	TYPE	REMARKS
CH-1	100	240	55	10	Air Cooled	
CH-2	70	170	55	10	Air Cooled	

DIFFUSERS, REGISTERS, AND GRILLES

SYMBOL	FUNCTION	THROW PATTERN	NOM. FACE SIZE INCHES (mm)	NECK SIZE INCHES (mm)	PRESSURE DROP INCHES H_2O (Pa)	NECK VELOCITY FPM (m/s)	REMARKS
	Supply Diffuser	4-Way	12 x 6		0.08	600-800	Sidewall Diffuser
	Return Grille	---	8 x 6		0.08	300-400	Closet Ceiling
	Exhaust Register	3-Way	9 x 9		0.05	300-400	CFM Indicated on Plan
A							
B							
C	Transfer						

SAMPLE MECHANICAL SCHEDULES

AIR SEPARATOR SCHEDULE							
SYMBOL	GPM (L/S)	MEDIUM	SIZE INCHES (mm)	MAX. OP. TEMP. °F (°C)	MAX. OP. PRESS. PSIG (kPa)	ΔP FT.HEAD (kPa)	REMARKS
AS-1	90	Hot Water	2-½	200	125	1.0	
AS-2	150	Chilled Water	4	70	90	1.0	

BOILER SCHEDULE									
SYMBOL	NET OUTPUT BTU/HR (kW)	MINIMUM EFFICIENCY	FUEL	GPM (L/s)	ΔT (°C)	EWT °F (°C)	P(Max.) (kPa)	TYPE	REMARKS
B-1	725,000	80 percent	Natural Gas	72.5	20	160	5 FT H_2O	Forced Draft	
B-2	405,000	80 percent	Natural Gas	40.5	20	160	5 FT H_2O	Natural Draft	

CONDENSING UNIT SCHEDULE				
SYMBOL	CAPACITY BTUH (kW)	TYPE	AMBIENT TEMP °F (°C)	SUCTION TEMP °F (°C)
CU-1	80,000	Air Cooled	93	40

CU-2	78,000	Air Cooled	93	40

SAMPLE MECHANICAL SCHEDULES

CONVECTOR SCHEDULE							
SYMBOL	BTUH (kW)	ELEMENT LENGTH INCHES (mm)	ELEMENT DEPTH INCHES (mm)	ENT.WATER TEMP °F (° C)	LVG. WATER TEMP °F (° C)	FLOW GPM (kPa)	RESULTS
C-1	8,200	44	8	190	170	0.82	
C-2	5,900	32	8	190	170	0.59	

HUMIDIFIER SCHEDULE		
SYMBOL	AIR HANDLING UNIT SERVED	STEAM OUTPUT LB/HR (kG/HR)
H-1	AHU-1	30

PLUMBING FIXTURE SCHEDULE						
ITEM	FIXTURE	CW INCHES (mm)	HW INCHES (mm)	WASTE INCHES (mm)	VENT INCHES (mm)	REMARKS
P-1	Water Closet	1	--	4	2	
P-2	Urinal	3/4	--	2	1-1/2	
P-3	Lavatory	1/2	1/2	1/2	1-1/4	
P-4	Service Sink	1/2	1/2	3	1-1/2	
P-5	Drinking Water Dispenser	1/2	--	1-1/2	1-1/2	
P-6	Electric Water Heater	3/4	3/4	--	--	

SAMPLE MECHANICAL SCHEDULES

PUMP SCHEDULE							
SYMBOL	GPM (L/s)	TOTAL HEAD FEET (kPa)	FLUID TEMP °F (°C)	MAXIMUM HP (W)	SERVICE (MIN) EFFICIENCY	TYPE	REMARKS
CHWP-1	232	98	100	2	55	Incline Centrifugal	Chilled Water Pump
CHWP-2	160	91	100	1	55	Frame Mounted, Close Coupled, Centrifugal	
HWP-1	73	62	100	3/4	65		Hot Water Heating
HWP-2	40	60	100	1/2	65		

NOTE: Pump heads for estimating only. Contractor shall be held responsible for calculations. Pump head based on actual piping layout.

UNIT HEATER SCHEDULE								
SYMBOL	CAPCITY BTUH (W)	NOM. CFM (L/s)	E.A.T °F (°C)	E.W.T °F (°C)	L.W.T °F (°C)	FLOW GPM (L/s)	MOTOR HP (W)	TYPE
UH-1	33,000	1,200	45	190	170	3.3	1/20	Horizontal Louvers
UH-2	8,000	280	45	190	170	0.85	1/25	Horizontal
UH-3	12,000	550	45	190	170	1.2	1/25	Horizontal

SAMPLE MECHANICAL SCHEDULES

VARIABLE AIR VOLUME BOX SCHEDULE											
SYMBOL	INLET DIAM. INCHES (MM)	COOLING		HEATING						MAX PRESSURE DROP, INCHES H_2O (Pa)	REMARKS
		CFM MAX (L/s)	CFM MIN (L/s)	TOTAL COIL LOAD BTUH (W)	FLOW RATE GPM (L/s)	ENT WATER TEMP °F (°C)	TEMP DIFF □F (°C)	CFM (MAX) (L/s)	AHU SERVED		
VAV-1	6	280	35	4,660	0.54	180	20	140	AHU-1	1/2	
VAV-2	6	280	35	4,210	0.50	180	20	140	AHU-1	1/2	
VAV-3	6	280	35	5,400	0.67	180	20	140	AHU-2	1/2	

WATER HEATER SCHEDULE - DOMESTIC WATER DATA								
SYMBOL	SPEC. TYPE	FUEL	STORAGE, GALLONS (LITERS)	RECOVERY, GPH	ENTERING TEMP °F (°C)	LEAVING TEMP °F (°C)	MAX. PRESSURE DROP, PSI	REMARKS
WH-1	Vertical	Gas	252	252	50	110	---	

WATER HEATER SCHEDULE - HEATING WATER DATA								
SYMBOL	SPEC. TYPE	FUEL	INLET TEMP □F (°C)	OUTLET TEMP □F (°C)	CAPACITY GPM	MAX. PRESSURE DROP, PSI	TUBE WORKING PRESSURE, PSI	REMARKS
WH-1	VERTICAL	GAS	190	170	12.7	1		

EXHAUST FAN SCHEDULE						
SYMBOL	AREA SERVER	CFM (L/s)	STATIC PRESSURE IN H_2O	HP	TYPE	REMARKS
EF-1	Mech. Room	1,680	0.25	1/4	Ceiling Exhaust Fan	
EF-2	Attic	1,260	0.25	1/16	Centrifugal	
EF-3	Kitchen	1,400	0.25	1/4	Centrifugal	Range Hood

EXPANSION TANK SCHEDULE			
SYMBOL	SIZE GALLON (LITER)	SERVICE	REMARKS
ET-1	37	Hot Water	
ET-2	15	Chilled Water	

FAN COIL UNIT SCHEDULE										
		COOLING COIL								
SYMBOL	NOMINAL UNIT CFM (L/s)	TOTAL D.B.H.	ENTERING AIR		MAX. COIL P.D. FT H_2O	TOTAL M.B.H.	ENTERING AIR D.B. °F (°C)	ENTERING WATER TEMP °F (°C)	MAX. COIL P.D.	REMARKS
			D.B. °F (°C)	W.B. °F (°C)						

EXHAUST FAN SCHEDULE					
FAN NO.	AREA SERVED	TYPE	L/S	Pa	REMARKS
EF-1	THATER ROOM	WALL	300	25	CENTRIFUGAL TYPE
EF-2	TOILET	WALL	310	25	CENTRIFUGAL TYPE
EF-3	BATTERY ROOM	WALL	410	30	EXP. PROOF CENT.
EF-4	WELDING AREA	WALL	890	30	CENTRIFUGAL TYPE
EF-5	SHOP AREA	WALL	850	750	CAR.MON.EXH.SYS
EF-6	SHOP AREA	BRACHET	850	750	BELT DRIVEN BL

PLUMBING FIXTURE SCHEDULE				
ITEM	FIXTURE	WASTE	C.W.	H.W.
P-1	WATER CLOSET	100	25 mm	-
P-2	URINAL	50	20 mm	-
P-3	LAVATORY	32	15 mm	15 mm
P-4	SERVICE SINK	80	15 mm	15 mm
P-5	DRINKING WATER DISPENSER	40	15 mm	-
P-6	ELECTRIC WATER HEATER	-	20 mm	20 mm

COOLING TOWERS				
ON. REQ'D	L/S EACH	WATER ON	WATER OFF	WET BULB TEMP
2	0.250	25□C	31□C	27□C

CONDENSATE PLUMPING UNIT			
TYPE	L/S EACH	DISCHARGE PRESSURE kPa	MIN. RECEIVER CAP'Y L.
DUPLEX	0.006	2.40	75

CONVERTOR SCHEDULE				
SPACE	SYMBOL	KW	L/S	AVE. WATER TEMP.
LOCKER RM	C-1	6240	0.0022	90□C
TOILET	C-2	2640	0.0009	90□C

VAC SYSTEM ALTERNATIVES

PROJECT:

LOCATION:

FY: _____ LI: _____ DATE:

A/E/:

MECHANICAL ENGINEER (A/E):

MECHANICAL ENGINEER (SAV. DIST.):

ALTERNATIVES.

SAVANNAH DISTRICT

CERTIFICATE FOR DESIGN OF MECHANICAL ROOM

BASE _____ FY - ___ CONTRACT NO.

PROJECT _____ L.I.

FIRM NAME _____ DATE

I certify that the mechanical room has sufficient space to accommodate, and service all mechanical equipment shown on the mechanical drawing(s).

_____ DATE
Signature of Architect

_____ DATA
Signature of District Reviewer/Checker

*

CHAPTER A-5

ELECTRICAL POWER, LIGHTING, GROUNDING, COMMUNICATIONS AND ALARM SYSTEMS

INDEX

5.1 GENERAL

5.2 APPLICABLE PUBLICATIONS
- 5.2.1 Air Force Manuals, Regulations, and Instructions
- 5.2.2 Architectural and Engineering Instructions
- 5.2.3 Engineer Technical Letter (ETL), Manual (EM), and Regulations (ER)
- 5.2.4 Military Handbook, Manual and Standard
- 5.2.5 Military Design Guide
- 5.2.6 Department of the Army Technical Manuals (TM)
- 5.2.7 American National Standard Institute (ANSI)
- 5.2.8 Institute of Electrical and Electronic Engineers (IEEE)
- 5.2.9 National Association of Corrosion Engineers (NACE)
- 5.2.10 National Fire Protection Association (NFPA)
- 5.2.11 Guide Specifications

5.3 PRECONCEPT SUBMITTAL REQUIREMENTS

5.4 CODE 3 DESIGN REQUIREMENTS

5.5 CONCEPT/EARLY (35 PERCENT) PRELIMINARY DESIGN SUBMITTAL REQUIREMENTS
- 5.5.1 Concept Design Analysis
- 5.5.2 Interior Electrical System Design Narrative
- 5.5.3 Exterior Electrical Distribution System Design Narrative
- 5.5.4 Field Trip Report
- 5.5.5 Energy Conservation Design Narrative
- 5.5.6 Concept/Early Preliminary (35 Percent) Design Drawings
- 5.5.7 Removal or Demolition
- 5.5.8 Additional Criteria

5.6 PRELIMINARY (OVER THE SHOULDER) SUBMITTAL REQUIREMENTS

5.7 PRELIMINARY (60 PERCENT) DESIGN SUBMITTAL REQUIREMENTS
- 5.7.1 Preliminary Design Analysis
- 5.7.2 Preliminary Design Drawings
- 5.7.3 Outline Specifications
- 5.7.4 Additional Criteria

5.8 FINAL (100 PERCENT) DESIGN SUBMITTAL REQUIREMENTS
- 5.8.1 Final Design Analysis

5.8.2 Final Design Drawings
5.8.3 Specifications

5.9 CORRECTED FINAL DESIGN SUBMITTAL REQUIREMENTS

5.10 REQUIREMENTS FOR DESIGN/BUILD RFP PACKAGES

5.11 TECHNICAL REQUIREMENTS
5.11.1 Metering
5.11.2 Salvageable Material
5.11.3 Special Items
5.11.4 Fire Detection and Alarm System
5.11.5 Public Address Systems
5.11.6 Intercom System
5.11.7 Telephone/Communication System
5.11.8 Television
5.11.9 Intrusion Detection Systems (IDS)
5.11.10 Hospital Communication Systems
5.11.11 Special Grounding Systems
5.11.12 Radio Frequency Shielding
5.11.13 Cathodic Protection
5.11.14 Energy Conservation
5.11.15 Seismic Protection
5.11.16 Technical Requirements for Nonlinear Loads
5.11.17 Local Area Networks (LAN)
5.11.18 Leak Detection for Underground Storage Tanks

EXHIBITS

CHAPTER A-5

ELECTRICAL POWER, LIGHTING, GROUNDING,COMMUNICATIONS AND ALARM SYSTEMS

5.1 GENERAL. This chapter gives general guidelines for the preparation of drawings, specifications and design analysis as related to power, lighting, grounding, communications and alarm systems.

5.2 APPLICABLE PUBLICATIONS. The most current editions of the publications listed below constitute an addendum to this chapter wherever referenced or applicable.

5.2.1 Air Force Manuals, Regulations, and Instructions

AFR 88-50	Criteria for Design and Construction of Air Force Health Facilities
TB 90-02	Building Communications Cabling and Distribution Systems
AFI 32-1044	Visual Air Navigation Systems
AFI 32-1054	Corrosion Control
AFI 32-1063	Electrical Power Systems
AFM 88-3	(Chapter 13) Seismic Design for Buildings

5.2.2 Architectural and Engineering Instructions.

Medical Design Standards Jul 89

Installation Support Apr 96

Technical Instructions (IT)
IT 800-01 Design Criteria
IT 811-16 Lighting Design

Engineering Instructions (EI)
EI 16E500 Lighting Design

5.2.3 Engineer Technical Letter (ETL), Manual (EM), and Regulations (ER).

(AF) ETL 83-3	Interior Wiring Systems
(AF) ETL 87-9	Prewiring
(AF) ETL 91-6	Cathodic Protection

(AF) ETL 94-2	Utility Meters in New and Renovated Facilities
(AF) ETL 94-5	Fire Protection Engineering Criteria, Emergency Lighting and Marking of Exits
ETL 1110-3-403	Electrical Power Systems for Non-Linear Loads
ETL 1110-3-412	Transformer Application Guidance
ETL 1110-3-441	Electronic Ballasts for Fluorescent Lighting Fixtures
ETL 1110-3-474	Cathodic Protection
ETL 1110-3-492	Year 2000 (Y2K) Compliance and Acceptance Procedures
ETL 1110-3-502	Telephone and Network Distribution System Design and Implementation Guide
ETL 1110-9-10(FR)	Cathodic Protection System Using Ceramic Anodes
ER 1110-3-110	Information Systems Design in Support of Military Construction
ER 1110-345-700	Design Analyses, Drawings and Specifications
ER 1110-345-720	Construction Specifications

5.2.4 Military Handbook, Manual and Standard.

DARCOMR 385-100	Safety Manual
COE STD 40-06-04	Lighting Fixture Standard
MIL-HDBK 1008C	Fire Protection For Facilities; Engineering, Design, and Construction
MIL-HDBK 1191	Department of Defense, Medical and Dental Treatment Facilities, Design and Construction Criteria, 15 October 1991, MIL-STD-1691
MIL STD 285	Method of Military Standard Attenuation Measurements for Enclosures, Electromagnetic Shielding, for Electronic Test Purposes
UFAS	Uniform Federal Accessibility Standard
MIL-HDBK 1012/3	Telecommunications Premises Distribution Planning, Design, and Estimating

5.2.5 Medical Design Guide.

5.2.6 Department of the Army Technical Manuals (TM).

TM 5-802-1	Economic Studies for Military Construction Design - Applications
TM 5-803-7	Airfield and Heliport Planning Criteria
TM 5-809-10	Seismic Design for Buildings
TM 5-811-1	Electric Power Supply and Distribution
TM 5-811-2	Electrical Design, Interior Electrical System
TM 5-811-5	Army Aviation Lighting
TM 5-811-6	Electric Power Plant Design
TM 5-811-7	Electrical Design, Cathodic Protection
TM 5-811-9	Voice/Data Telephone Systems
TM 5-811-13	Standards and High Efficiency Motors and Controllers
TM 5-811-14	Coordinated Power Systems Protection
TM 5-823-4	Marking of Army Airfield-Heliport Facilities
TM 5-824-4	Airfield Operational and Maintenance Facilities
TM 5-853-4	Security Engineering - Electronic Security Systems

5.2.7 American National Standard Institute (ANSI).

ANSI-C2	National Electrical Safety Code
ANSI-C12.1	Code for Electricity Metering
ANSI-C12.4	Mechanical Demand Registers
ANSI-C12.10	Electromechanical Watthour Meters
ANSI-C57.12.00	Standard General Requirements for Liquid-Immersed Distribution, Power and Regulating Transformers
ANSI-C57.12.28	Switchgear and Transformers - Pad-Mounted Equipment - Enclosure Integrity

ANSI-C57.91 Loading Mineral-Oil-Immersed Overhead and Pad-Mounted Distribution Transformers Rated 500KVA and Less w/65 or 55 Degrees C Average Winding Rise

ANSI/EIA/TIA-568 Commercial Building Telecommunications Cabling Standard

ANSI/EIA/TIA-569 Commercial Building Standard for Telecommunications Pathways and Spaces

ANSI/EIA/TIA-570 Residential and Light Commercial Telecommunications Wiring Standard

ANSI/EIA/TIA-606 Administration Standard for the Telecommunications Infrastructure of Commercial Buildings

5.2.8 Institute of Electrical and Electronic Engineers (IEEE).

IEEE Std 142 IEEE Recommended Practice for Grounding of Industrial and Commercial Power Systems

5.2.9 National Association of Corrosion Engineers (NACE).

NACE RP0169 Control of External Corrosion on Underground or Submerged Metallic Piping Systems

5.2.10 National Fire Protection Association (NFPA).

NFPA 20 Installation of Centrifugal Fire Pumps

NFPA 70 National Electrical Code (Latest Issue)

NFPA 70E Electrical Safety, Requirements for Employee Workplaces

NFPA 101 Life Safety Code

NFPA 780 Installation of Lightning Protection Systems

5.2.11 Guide Specifications.

Internet address for CEGS specifications http://www.hnd.usace.army.mil/techinfo/

5.2.12 Additional Publications

ADAAG Americans with Disabilities Act Accessibility Guidelines

EIA/TIA 568 and 569

EIA/TIA TSB 36 and 40

Telecommunications - Design Guide Requirements (Current as of 2 April 1997) (Fort Bragg)

5.3 PRECONCEPT (Code 3 Submittal) SUBMITTAL REQUIREMENTS. No requirements for this section.

5.4 CODE 3 DESIGN REQUIREMENTS. To be furnished by specific instructions to contract or delivery order.

5.5 CONCEPT/EARLY (35 PERCENT) PRELIMINARY DESIGN SUBMITTAL REQUIREMENTS.

5.5.1 Concept Design Analysis. The Concept Design Analysis shall include estimated connected load schedule (Exhibit A-5-1), all data and calculations to support design decisions, and estimates at this stage of design. The analysis shall include a concept lighting schedule which is to be in accordance with Exhibit A-5-2 and catalog cuts of all commercial fixtures proposed that are not in the COE Lighting Fixture Standard Drawing No. 40-06-04. Special outlets shall be identified and included in the special power outlet schedule (Exhibit A-5-3).

5.5.2 Interior Electrical System Design Narrative. The interior electrical design shall be a narrative presentation and shall include the following data:

5.5.2.1 Indicate the electrical characteristics (phase, voltage and number of wires) of the electrical system. Provide a justification for the type of system proposed (Economical or Special Condition).

5.5.2.2 Provide a brief description of the lighting system(s) to be used for major areas. Include a concept lighting schedule showing room name and/or number, lighting intensity, type of fixture (by standard drawing number or three manufacturers' catalog cut sheets), voltage, and basis of design such as I.E.S. criteria, definitive, etc.

5.5.2.3 State the type of wiring system, such as, rigid conduit or intermediate conduit, electrical metallic tubing, nonmetallic sheathed cable, etc. proposed and where it is intended to be used.

5.5.2.4 Provide a paragraph describing the proposed addition and alterations of special items of design, such as, specialized equipment, special receptacles, handicapped and seismic requirements, etc. Include a description and location of special power outlets and circuits (volts, phase, and amps). Reference pertinent to NEMA or other recognized standards to identify type receptacles selected.

5.5.2.5 Identify any hazardous area by class, division and group as defined in the National Electric Code and indicate type of equipment proposed for use in the area. State the source of any criteria, such as safety officer or some other recognized official. Include documentation of the source of the criteria.

5.5.2.6 Describe the lightning protection system proposed and if none, state the rational or reason for not proposing a lightning protection system. As a minimum, the designer shall perform the "Risk Assessment" analysis as described in NFPA 780. (Reference TM 5-811-3 entitled "Electrical Design, Lightning and Static Electricity Protection.")

5.5.2.7 Describe the grounding system to be installed, if required. If a counterpoise, grid, etc. is to be used, state standards to be used in the design.

5.5.2.8 Describe the basic characteristics of the panelboards, protective devices, switchgear, motor control centers or other major equipment to be provided. Short circuit and voltage drop calculations in the final design analysis must support the equipment selected. Federal specifications, NEMA, ANSI or other recognized standards are to be referenced to identify equipment construction and design. Indicate equipment interrupting rating and short circuit withstand current. Evidence shall be included to support that the equipment is manufactured or can be manufactured and supplied by at least three reliable manufacturers and that the space is adequate for the manufacturer's equipment having the greatest dimensions.

5.5.2.9 List Corps of Engineers' Guide Specifications that will be used. If the specification sections for which there are no OCE guides are already developed, such as sections which are to be tailored from other projects, untailored copies shall be included or attached.

5.5.2.10 Provide a firm statement that no brand names or proprietary items will be used in final plans and specifications. Any exception to this must have prior approval of the Chief of the Electrical Section, Corps of Engineers, Savannah (See ER-1110-345-720).

5.5.2.11 Describe any electrical metering equipment to be provided. If the facility has an EMCS system, coordinate metering requirements with Chapter A-7, Energy Analysis, Economic Analysis, Control Systems, and EMCS.

5.5.2.12 Provide a statement that coordination with other disciplines has occurred to ensure that no duct or liquid piping shall pass over panelboards or switchboards in accordance with N.E.C.

5.5.2.13 Identify any additional information or material required to complete the design or provide a statement that none is needed.

5.5.2.14 Provide a statement reflecting coordination with the local communication-electronics officer.

5.5.2.15 Provide samples of panelboard and fixture schedule to be used in the Final Design.

5.5.2.16 If the expansion or alteration of any existing system(s) is contemplated, then verify that the system(s) can accommodate the changes.

5.5.2.17 Describe any communication, alarm detection, or electronics requirements anticipated in the design.

5.5.2.18 Describe type of fire detection and alarm systems.

5.5.2.19 Describe the intrusion detection system. (Unless specifically funded on the project's 1391, only conduit and boxes will be provided for intrusion detection systems. Equipment to be connected to the conduit and box layout will be provided by the using service. Design information on conduit and box locations and sizes will be furnished by the using service.)

5.5.2.20 Describe the telephone system requirements. Provide a narrative description of the type system describing the type of instruments and the size of the installation including stations, trunk size, connection to and location of switch, and all instructions received from the Director of Information Management (DOIM) or the Base Communication Office (BCE). Refer to paragraph TECHNICAL REQUIREMENTS, Telephone/Communication System for additional information.

5.5.3 Exterior Electrical Distribution System Design Narrative. The exterior electrical design shall be a narrative presentation and shall include the following data:

5.5.3.1 Contact the DPW or DPWE (Army) or Base Civil Engineer (Air Force) with reference to documentation relative to the adequacy of the primary supply at the point of takeoff. If primary source is inadequate, state measures proposed to correct the deficiency in the design. Reference photographs of any existing substation components, pole line structures, etc. and include the photographs in the field trip report.

5.5.3.2 Provide electrical characteristics of power supply from the service point to the main service equipment (voltage, phase, number, and size of conductors).

5.5.3.3 Narrate conclusions in the design analysis as related to the total connected load and resulting kVA demand load. Indicate type, number, kVA capacity of transformer installation proposed. State the primary and secondary connections of transformers (i.e., 12,470 to 480Y/277 volts, Delta-wye) in accordance with ANSI C57.12.00.

5.5.3.4 State basis for the selection of the secondary distribution voltage, i.e., 480Y/277 vs. 208Y/120 using life-cycle analysis.

5.5.3.5 State type of conductor, such as copper or aluminum, where proposed to use, and a justification for the choice made.

5.5.3.6 Provide a statement describing the standards of design (i.e., primary and secondary voltage drop) and the physical characteristics of the overhead or underground circuits. If underground, state the basis for the selection. State actual primary voltage drop for the size of primary distribution conductors proposed to serve the load. Reference

applicable conclusions and/or calculations in the design analysis. State short circuit current available at the project site if it can be obtained from the user. If not, state so.

5.5.3.7 Provide a statement describing street lighting, security, parking lot lighting, or sidewalk lighting requirements. Types of fixtures, pole heights, and proposed intensities are to be included. A life-cycle evaluation is required to justify the type of illumination selected. The design analysis must support decision(s).

5.5.3.8 Provide a list of guide specifications that will be used. Listing shall be included with interior guide specification list.

5.5.3.9 Provide a statement that no brand names or proprietary items will be used in the final plans and specifications without approval from COE, Chief of the Electrical Section. ER 1110-345-720, CONSTRUCTION SPECIFICATIONS, shall be consulted for directions, respecting the use of trade names and proprietary items. The designer shall submit a list of the proprietary items proposed for inclusion in the final plans and/or specifications and shall prepare the appropriate wavier request documentation.

5.5.3.10 Where a cathodic protection system is required, provide the name of the licensed corrosion engineer or NACE specialist along with the following information on the cathodic protection system:

5.5.3.10.1 A statement clearly defining the area(s) of the structure or component within the soil or the water to be protected.

5.5.3.10.2 A description of the type of systems considered, a comparison of the systems relative to cost, maintenance, etc.

5.5.3.10.3 Calculations on all of the systems that are considered showing all their relevant information and descriptions.

5.5.3.10.4 A summary of the data required is in paragraph 5.9.13.4, Description of Analysis Work.

5.5.3.11 Provide a statement describing the extent of any exterior work such as telephone lines, television (TV) distribution cables, etc., whether they are aerial or underground and if underground whether direct burial or duct bank, and all instructions received from the Director of Information Management (DOIM) or the Base Communication Engineer (BCE).

5.5.4 Field Trip Report. The electrical engineer responsible for the design is required as part of his contract to visit the site and furnish a trip report with his concept submittal. During the site visit the responsible electrical engineer shall coordinate with the appropriate Director of Public Works (and Environment), DPW, DPWE, PWBC, or Base Civil Engineering personnel concerning the following: (a) availability of adequate power; (b) power connection points; (c) power system characteristics; (d) communications support items such as duct banks and manholes; (e) fire alarm reporting system requirements; (f)

intrusion detection and security systems where required; and (g) any other items necessary for the design of supporting services to the facility. The report shall include names and titles of persons contacted and a brief description of all guidance information or instructions received. Also, photographs showing all field conditions influencing the design, especially system connections, shall be provided.

5.5.5 Energy Conservation Design Narrative. Energy conservation measures shall be indicated. The electrical designer shall be a team member of energy budget preparation and shall provide necessary information to the architect and mechanical designers for inclusion in the energy budget. (Reference Chapter A-7, Energy Analysis, Economic Analysis, Control Systems, and EMCS). The narrative shall describe measures and techniques that are proposed in the electrical design that will conserve energy. Support all recommendations as required in Chapter A-7.

5.5.6 Concept/Early Preliminary (35 Percent) Design Drawings. All CADD drawings shall be prepared in accordance with Chapter A-10.

5.5.6.1 Interior Electrical. Provide interior electrical drawings showing only special purpose power outlets, a communication system one line diagram, and a plan identifying the location and size of any communication wiring closet(s) and main or intermediate distribution frames.

5.5.6.2 Exterior Electrical.

5.5.6.2.1 Provide a separate electrical site plan indicating all existing and proposed support utility lines and equipment required to serve the project including electrical power lines, telephone and other communication lines. The plan shall also show all roads and driveways, parking areas, and any other items necessary for functional and operating adequacy. Indicate the extent of any demolition to be done. If extensive, provide separate drawings with independent legend for new work.

5.5.6.2.2 Provide electrical characteristics (voltage, phase, number, and size of conductors) for the primary and secondary lines at the point of delivery and/or any extensions. Indicate characteristics and standards of design for overhead or underground line.

5.5.6.2.3 Indicate the number, location, kVA capacity, type, primary and secondary voltages of the transformer (i.e., three-phase, pad-mounted, 150kVA, delta-wye, 12,470-480Y/277 volts) installation proposed.

5.5.6.2.4 Indicate intensity and type of exterior lighting proposed (street lighting, security lighting, or parking lot lighting).

5.5.6.2.5 Show guy leads and guy strengths on the plans.

5.5.6.2.6 Identify any existing and new communications service connections, both overhead and underground. Indicate characteristics and standards of design for overhead or underground communication line.

5.5.7 Removal or Demolition. All items requiring removal and/or demolition shall be discussed in the narrative shown on the drawings.

5.5.8 Additional Criteria. Any additional criteria, deviations concerning criteria, questions or problems shall be listed in the design narrative.

5.6 **PRELIMINARY (60 PERCENT) SUBMITTAL REQUIREMENTS**. No requirements for this section.

5.6 **PRELIMINARY (60 PERCENT) DESIGN SUBMITTAL REQUIREMENT**.

5.7.1 Preliminary Design Analysis. This stage of the design analysis shall be an entirely updated analysis (not amendments to concept submittal) to permit verification that the design complies with the criteria furnished and the approved Concept Design. When only Concept/Early Preliminary and Final Design submittals are required, the Final Design Analysis will contain all information developed in the Concept/Early Preliminary narrative, organized as outlined in Concept/Early Preliminary (35%) Design Submittal Requirements of this chapter under paragraph 5.5.1 entitled Concept Design Analysis, as well as that identified in this Section and paragraph 5.7, the Final (100%) Design Submittal Requirements.

5.7.1.1 Interior Electrical Work. Determine estimated loads, provide sizes for significant feeders, the main switch, service entrance and transformers and include photometric calculations. (Individual circuit load tabulations and interior voltage drop calculations are not required for the preliminary design analysis.)

5.7.1.2 Exterior Electrical Work. Determine estimated primary and secondary wire sizes and transformer sizes.

5.7.2 Preliminary Design Drawings. All CADD drawings shall be prepared in accordance with Chapter A-10. The Preliminary drawings shall show all information given on the Concept/Early Preliminary drawings but in greater detail. In addition, the Preliminary drawings shall contain the following:

5.7.2.1 Interior Electrical.

5.7.2.1.1 A complete symbol legend for all devices or equipment shall be shown on the plans except that legend for aerial and/or underground exterior electrical work may be separate and shown on the exterior plans.

5.7.2.1.2 The interior electrical drawings shall include the designations of all rooms and work areas by name as shown on architectural or other drawings.

5.7.2.1.3 Define the limits of all hazardous areas and indicate the Class, Division, and Group which applies per the NEC.

5.7.2.1.4 Drawings shall be thoroughly checked by the designer before submittal for discrepancies and conflicts, particularly between disciplines and various systems above dropped ceilings.

5.7.2.1.5 All removals, if any, must be shown. If removals are extensive, separate demolition plans are required.

5.7.2.1.6 Show the location and type of lighting fixtures to be installed in each area.

5.7.2.1.7 Completed fixture schedule shall be included on the drawings. See Exhibit A-5-4.

5.7.2.1.8 Show the attachment point of service drop.

5.7.2.1.9 Panelboards, motor control centers, switchgear equipment and all utilization equipment shall be located with schedules and physical layout arrangement completed.

5.7.2.1.10 Location, electrical characteristics, and horsepower (if applicable) of electrical driven equipment shall be indicated on the drawings.

5.7.2.1.11 Power riser diagram for the typical building shall be essentially complete except for finalization of conduit and wire sizes.
5.7.2.1.12 Interior wiring need not be shown on preliminary electrical plans; however, provide notes indicating the type of wiring system (conduit, EMT, nonmetallic sheathed cable) proposed and whether wiring system is exposed or concealed.

5.7.2.1.13 Special features such as underfloor raceways, clock system, fire alarm system, exit lighting, bus duct, communication facilities, etc. shall be included on the drawings.

5.7.2.1.14 Provide an interior telephone system layout including backboards, cabinets, outlets, etc. as required by criteria.

5.7.2.1.15 Provide details of telephone outlets, telephone backboard arrangement, etc.

5.7.2.1.16 Show location of all devices and equipment for signal systems on the floor plans. Show location of devices to be interconnected, (i.e., show duct-mounted smoke detectors, hood fire suppression system contacts for fire alarm system input, etc.).

5.7.2.1.17 Provide complete riser diagrams for fire detection and alarm system, intrusion detection conduit system, public address system, telephone/communication system, etc. Risers should show the location of the various components and any interconnections with other systems such as HVAC controls and fire suppression system connections to fire alarm panels, etc. Conduit, wire size, and wire counts should not be shown on the riser diagrams for fire alarm system since these vary by manufacturer. The only exception is

the AC power to the control panel and the conduit to the telephone backboard for remote reporting circuits.

5.7.2.1.18 Verify implementation of the concept annotated comments.

5.7.2.2 Exterior Electrical.

5.7.2.2.1 Exterior electrical layout plans are required and shall be separate from water, sewage, and other utility plans. Other new or existing utilities shall be shown only as required to prevent conflicts with the electrical work.

5.7.2.2.2 All exterior electrical shall be completed in plan with poles and other pertinent components detailed. Details shall include the transformer's location, type of construction, kVA, voltage and phase characteristics and conductor type, size and number. If manholes are required for underground, utilize typical manhole from TM 8-511-1. Manholes shall be detailed on the final drawings submittal. Neither handholes nor pullboxes shall be used with high or medium voltage primaries.

5.7.2.2.3 Show accurate location and sizes of existing lines including poles and transformers from which power is to be obtained.

5.7.2.2.4 Indicate type of new construction (i.e., aerial or underground) and type of primary or secondary (i.e., copper or ACSR) conductors.

5.7.2.2.5 Indicate poles and equipment to be relocated or removed. Clearances from buildings shall be in accordance with the National Electric Safety Code.

5.7.2.2.6. Indicate new location of any relocated electrical items.

5.7.2.2.7 On large projects where underground systems are used the designer shall furnish prints of the site showing the communication service connection points for each building, manholes and final connection to the existing system.

5.7.2.2.8 Where cathodic protection has been recommended and approved at the Concept Design stage, the extent and layout of the system shall be indicated.

5.7.3 Outline Specifications.

5.7.3.1 Prepare outline specifications based on applicable guide specifications. The outline specifications previously submitted for Concept/Early Preliminary phase shall be revised, updated, further developed and resubmitted in accordance with CHAPTER A-11, SPECIFICATIONS.

5.7.3.2 Indicate types of cables and conductors to be used.

5.7.3.3 Describe major items of equipment with sufficient clarity to permit a definite selection from catalog data for estimating purposes.

5.7.3.4 Where no guide specification sections or standard specification sections are provided, prepare a new outline specification from available criteria and instructions giving all pertinent material characteristics.

5.7.4 Additional Criteria. Any additional criteria, deviations concerning criteria, questions or problems shall be listed in the design narrative.

5.8 **FINAL (100 PERCENT) DESIGN SUBMITTAL REQUIREMENTS**.

5.8.1 Final Design Analysis.

5.8.1.1 The Final Design Analysis will be an entirely updated design analysis (not amendments to previously submitted design analysis) to support this submittal and shall contain all the information called for in paragraphs 5.5 and 5.8 of this chapter, even when preliminary submittal is not required. The Final Design Analysis will address previous submittal annotated comments.

5.8.1.2 General Description. A description of the general parameters, functional and technical requirements, and objectives and provisions of the design shall be described. A summary of economic factors influencing the choice of lighting, power, fire alarm and detection, and communications systems used in the project will be provided.

5.8.1.3 Design calculations and supporting documentation shall be provided to substantiate design considerations. Calculations will be computed and checked by separate individuals with the checking accomplished by a Registered Electrical Engineer. The cover sheet of the Design Analysis shall bear the names of the designer and the checker and subsequent computation sheets shall bear the names or initials of these individuals. Supporting documentation will be clear and legible with a tabulation showing all design loads and conditions. The source of loading conditions, formulas, and references will be identified. Assumptions and conclusions will be explained and cross-referencing will be clear. When a computer program is used which is not a Corps-approved program (the DAPPER program for power system design and the Lighting Technologies Lumen Micro, Cooper Luxicon and USI LightPro program series for lighting system design are Savannah District approved programs but their listing is not intended to restrict designers from using other design software), the program will be named and described and will include a flow chart showing how the program reaches solution. This description must be sufficient to verify the validity of methods, assumptions, theories, and formulas, but should not include source code documentation which would compromise proprietary programs. Calculations and data for the following shall be included in the analysis:

a. Lighting calculations used to determine maintained footcandle (fc) levels in all areas shall be performed. Method of computation for interior areas shall normally be the point by point method as described in the I.E.S. handbook, current edition. Other methods for specific applications shall be used when necessary for the particular design. Exterior area lighting, flood lighting, and security lighting computations shall follow accepted methods described in the I.E.S. handbook current edition. All parameters necessary to properly

specify and apply the floodlights shall be determined in the design analysis. When the lighting design is not based on luminaries contained in the 40-06-04 standards, then catalog cuts of all lighting fixtures and luminaries upon which the design is based shall be included in the design analysis along with manufacturer's name and catalog number of two additional fixtures which will meet the design requirements. Where required by specific instructions, a life cycle cost analysis shall be done to support the choice of illumination sources, otherwise the designer shall provide supporting economic data for the choice of fixtures and luminaries. Supporting data may include references to standard literature, manuals, or short cut methods which consider first cost, energy cost, maintenance and replacement cost.

b. Short-circuit calculations shall be made to determine the rating of all protective equipment and bus bracing. In all cases, available symmetrical short-circuit current at the service equipment shall be indicated. (If more accurate data is not available, assume infinite bus on the primary and also consider motor contribution to fault current.) Short-circuit calculations shall be carried out to the point where all protective elements are demonstrated to be properly rated to withstand potential faults and/or safely interrupt faults as required. Protective system selectivity and coordination shall be demonstrated by use of time-current characteristic curve plots in designs of complex systems. Ground fault protection coordination shall be determined and time-current settings shall be calculated in all cases where ground fault interruption is required.

c. Voltage drop calculations shall be done for the service, all feeders and on worst-case branch circuits. The combined voltage drop from the service transformer to the utilization equipment shall not exceed 5 percent. Tables, curves, and short-cut methods obtained from accepted sources such as Industrial Power Systems Data Book by General Electric or Architects and Engineers Data Book by Westinghouse may be used. The source of the data must be referenced.

d. Existing loading data shall be furnished where connections are made to existing transformers or load centers including method of determining the availability of sufficient capacity to carry the additional loads.

e. Calculations of all connected loads, demand factors, and demand loads by circuit number for each panel and switchboard shall be provided. This includes spare circuits. The following shall be considered in the development of panelboards and switchboards.

(1) A summary of panel and switchboard demand loads, feeder sizes, diversity between panels, main switch fuse or circuit breaker trip size, service entrance size or service drop size, and transformer size.

(2) Each motor feeder and motor protective devices shall be computed in accordance with the requirements of the National Electrical Code (NEC).

(3) In computing sizes of feeders and transformers, demands shall be applied to the connected loads and appropriate diversities between the demands shall be applied to determine a realistic diversified demand. Where the nature of loading cycles are known, oil

filled transformer ratings shall be based on ANSI Standard C57.91 rating factors to allow for the most economical design.

(4) Ambient-temperature or conductor grouping factors considered in the selection of equipment and/or conductor sizes shall be indicated. Weight and dimensions of each major items of equipment (supported by manufacturer's names and catalog/model numbers) shall be provided.

f. Calculations for cathodic protection shall include surface area of protected surface, current density requirements, number, size and type of anodes to be used, size of all conductors, size of rectifier and branch circuit calculations for the circuit serving the rectifier. Any pertinent catalog information or technical requirements references shall be included.

g. On projects involving electrical power line construction using No. 4/0 copper or 336 MCM ACSR or larger, the designer shall show in the design analysis calculations for guy strengths, sag, and stringing tensions based on maximum loading tension per conductor of 13 kilonewtons. The guy strengths, sag, and stringing tensions shall be tabulated on the drawings. Where double circuit lines are required, guy attachment points at poles shall be shown on construction details. Calculations for guys shall be made for all aerial construction and the required strength indicated on the drawings.

h. In TV distribution designs the designer shall provide calculations showing db losses through the proposed system to each outlet. A riser diagram shall be provided showing each amplifier, line splitter, tap off, outlet and cable. The type of cable used shall be identified. The calculation shall be made assuming 0-db signal on the load side of the antenna.

i. In alarm system designs the designer shall conduct sound loss (db loss) analysis to assure adequate signal transmission to occupants within the facility.

j. Trade names are not allowed on the contract plans and specifications; however, for lighting fixtures and other equipment such as motor control centers, switch gear, bus duct, transformers, special receptacles, etc., (where special features are required) the current manufacturer and catalog number of the equipment shall be indicated in the Design Analysis.

5.8.2 Final Design Drawings. All CADD drawings shall be prepared in accordance with Chapter A-10. Final plans will be the refinement and completion of Concept/Early Preliminary and Preliminary drawings. All comments from this office relating to Concept/Early Preliminary and Preliminary design shall be incorporated in the Final drawings.

5.8.2.1 All details for the final package shall be on the drawings. Congested areas where there can be interference with various electrical systems, cable trays, piping, ducts, etc., shall be thoroughly detailed by expanded scale drawings. Savannah District has prepared details and placed them in "cell libraries" that can be made available upon request. These

details were prepared in the Intergraph MicroStation PC format and can only be furnished in that format. These library(s) are not all encompassing of all design situations and do not relieve the designer of his responsibility for the design.

5.8.2.2 Thoroughly check the drawings for discrepancies, for compatibility between drawings and specifications, and for compatibility between disciplines. Check the following, as a minimum, but do not limit checking to these items.

a. Verify that the legend and/or symbols are complete and consistent with the drawings. (Electrical symbols shown on civil site plans shall be consistent with the legend shown on electrical drawings.)

b. Verify that the electrical site plans show all of the duct banks, manholes, cable size, splicing points and any other information required to bring the telephone/communication service to the buildings.

c. Verify that the exterior electrical drawings show clearances among the different systems, clearances between circuits of same voltage and circuits of different voltages, and clearances from transformers to other equipment or building components.

d. Verify that the designation of all rooms and areas are as shown on architectural and other drawings.

e. Verify that all hazardous areas are clearly identified.

f. Verify consistency between electrical and other disciplines (equipment locations, reflected ceiling plans, motor voltage and horsepowers, etc.) and ascertain that no conflicts exist on the electrical drawings.

g. Verify that motor control center, switchboard, switchgear and panelboard schedules and risers agree with home runs and other information on the plans. Panelboard schedules shall be in the format of Exhibit A-5-5 or similar panelboard formats providing the odd/even numbering arrangement and consistent with industry standards and practices.

h. Verify that proper and practical circuitry practices are used regarding the determination of the number of conductors and conduit sizes.

i. Verify that complete riser diagrams for telephone, public address, intercom and other communications systems are provided and agree with the plans.

j. Where additions to existing systems are made (i.e., fire alarm, public address, and remote control systems, etc.), the designer shall have verified that the existing system are expandable and can accommodate the additions. This verification shall include an on site survey of the system and contacts with the manufacturer to ensure that expansion modules, etc., are available. Information on manufacturer, model number, etc. of the existing equipment shall be included in the plans and specifications.

k. Verify adequacy of details.

l. Verify that the fixture types indicated on the drawings agree with the fixture schedule (Exhibit A-5-4).

m. Assure design complies with design analysis and criteria.

5.8.3 Specifications. Typed project specifications shall be submitted in accordance with CHAPTER A-11, SPECIFICATIONS.

5.8.3.1 Read thoroughly and comply with the instructions in each set of guide specifications.

5.8.3.2 Cross out inapplicable index items, publications, paragraphs, phrases, words, and sentences. Fill in blanks as applicable.

5.8.3.3 Add publication references, paragraphs, phrases, words, and sentences for items not adequately covered by specifications.

5.8.3.4 Do not specify proprietary items unless prior approval per paragraph 5.5.3.9 is obtained. When proprietary products are incorporated into the specifications or plans, the designer shall identify the product(s), the specification paragraph or plan in which the proprietary item(s) is addressed, and the document granting authority to use said proprietary product. The designer shall provide this information by typed notes attached to the cover page of the specification in question (and if on the plans, by typed notes attached to the cover page of the specification most closely identified with that product). A copy of the granting authority documentation shall follow the cover page.

5.8.3.5 Ascertain that major or special types of equipment are available commercially.

5.8.3.6 For design whose demand load is 500 kVA and above or is for a processing system that would be undesirable for the system to cease functioning, the specifications shall require the Contractor to provide a system short circuit study and coordination curves for the equipment to be furnished. The study and curves shall be approved prior to approval of shop drawings for the equipment.

5.8.3.7 If the design is predominately exterior overhead or underground with a small amount of information required that is contained in the interior electrical specification, the design specifications may include excerpts from the interior specifications in either the overhead or underground specification and the title changed to "Electrical." This procedure must have prior approval from the Chief of the Electrical Section, Corps of Engineers, Savannah District Office.

5.8.3.8 All light fixture details shall be included on the drawings and shall not be incorporated into the specifications. The designer shall edit each detail as appropriate for specific application. For each luminaire of the Lighting Fixture Schedule, for which there is no corresponding (exact duplicate) drawing from the Drawing No. 40-06-04, provide a

detail with specification on the drawings having criteria similar to that contained on the 40-06-04 drawings. Savannah District has prepared fixture details and placed them in "cell libraries," that can be made available upon request of the project manager. These details were prepared in the Intergraph MicroStation PC format and can only be furnished in that format. This library(s) is not all encompassing of all design situations and does not relieve the designer of his responsibility for the design.

5.9 **CORRECTED FINAL DESIGN SUBMITTAL REQUIREMENTS**. The corrected final submittal is not to be considered a normal design level and will be provided in those cases in which the review comments require revision due to error or omission. The comments generated during the Final Review shall be incorporated into the completed design analysis (not amended sheets), specifications, and drawings before they are submitted as Corrected Final Design. All of the requirements of the Final Design Submittal apply for each subsequent submittal.

5.10 **REQUIREMENTS FOR DESIGN/BUILD RFP PACKAGES.** To be furnished with specific instructions to contract or delivery order.

5.11 **TECHNICAL REQUIREMENTS**.

5.11.1 Metering.

5.11.1.1 Air Force Projects. Reference Air Force Engineering Technical Letter (ETL) 94-2: Utility Meters in New and Renovated Facilities. Metering equipment shall be installed if required by the guidance provided in ETL 94-2, on all main energy supplies for all buildings to be constructed. Where upgraded existing or new buildings are served by their own energy generation plant or system, alternate methods to determine usage may be employed. Watt-hour meters shall meet ANSI C12.1 and C12.10, except that the numbered terminal wiring sequence and case size may be the manufacturer's standard. Watt-hour meters shall be of the drawout switchboard type having a 15-minute, cumulative form, demand register meeting ANSI C12.4 and provided with not less than two and one-half stators. Watt-hour demand meters shall have factory-installed electronic pulse initiators meeting the requirements of ANSI C12.1. Pulse initiators shall be solid-state devices incorporating light-emitting diodes, phototransistors, and power transistors, except that mercury-wetted output contacts are acceptable. Initiators shall be totally contained within the watt-hour demand meter enclosure, shall be capable of operating up to speeds of 500 pulses per minute with no false pulses, and shall require no field adjustments. Initiators shall be calibrated for a pulse rate output of one pulse per 1/4 disc revolution of the associated meter and shall be compatible with the indicated equipment. It shall not provide less than one pulse per kWH.

5.11.1.2 Army Projects. Installation of permanent utility meters for both new construction and alteration, rehabilitation and modernization projects shall be as follows:

a. Electrical meters of the kilowatt-hour and 15-minute kilowatt demand type with a kWH pulsing device will be provided on:

(1) Each main post and large area substation or switching station and each circuit leaving such station.

(2) Feeders serving major areas, such as barrack complexes.

(3) Typical large or unique structures on each installation, such as field houses, commissaries, medical facilities, administrative buildings, barracks, dining facilities, and major non-appropriated fund facilities.

b. Electrical meters of the kilowatt demand type will be provided on distribution substations having capacities of 500 kVA or larger which serve more than one structure. Permanent utility meters will be installed with provisions to isolate and remove meters for calibration and maintenance, and will be suitable for operation in conjunction with an energy monitoring and control system.

5.11.2 Salvageable Material. The salvageable material resulting from a demolition design and not reincorporated in the design remains property of the U.S. Government. The debris will be disposed of as directed by the Contracting Officer. A typical removal paragraph is given below.

5.11.2.1 Removals. Where indicated, existing equipment and materials shall be removed and shall remain the property of the Government. Salvageable equipment and materials shall be delivered to the Contracting Officer for storage on the base as directed. Materials and debris considered unsalvageable by the Contracting Officer shall be disposed of as directed.

5.11.3 Special Items. The following items will be included in each submittal where applicable:

a. Corps of Engineers guide specs must be used in preparing contract specifications for diesel-electric generators. Unless application requires otherwise, provide brushless type generators.

b. Army and Air Force facilities requiring design for the handicapped shall be designed in accordance with the Uniform Federal Accessibility Standard (UFAS). These instructions cover such items as switch heights, adequate lighting at ramps, exit lights, etc.

c. Egress lighting must comply with life safety code NFPA 101. In the concept and final design analysis write up, reference paragraph and chapter that the design is based upon.

d. Aerial Systems. Construction details for aerial construction shall be consistent with modern practices. Pole framing details shall generally follow those employed by the power company serving the general locale of the installation. All designs shall be consistent with the requirements of ANSI C2, National Electrical Safety Code.

e. Underground Systems. All underground primary conductors shall be installed in concrete encased ducts unless indicated otherwise in the Specific Instructions or other detailed criteria for the project.

f. Provide both green grounding conductors and driven electrodes for exterior lighting poles.

g. Seismic Protection. All projects will include appropriate provisions for protection of electrical equipment, lighting fixtures, raceways, and underground utilities against seismic events in accordance with TM 5-809-10 (AFM 88-3, Chapter 13), Seismic Design for Buildings. Generally, these requirements can be satisfied by inclusion of guide specifications CEGS 13080 SEISMIC PROTECTION FOR MISCELLAENEOUS EQUIPMENT and/or 16070 SEISMIC PROTECTION FOR ELECTRICAL EQUIPMENT in the contract specifications.

h. This subparagraph is included to emphasize the requirements of the AEI, Chapter 12, paragraph 2. g., Maintenance and Operation. The requirements of the AEI for a separate space for electrical equipment shall be followed, unless instructed otherwise by the Chief, Electrical Section. Dedicated electrical space shall be provided around and above panelboards, switchboards, transformers, transfer switches, motor control centers and similar major items of electrical equipment. This space shall be defined as follows:

(1) The space in front of the equipment shall be as defined in Table 110-16(a) of the NEC. This area of space shall be extended to the ceiling to define a volume of dedicated space through which no pipes, ducts, or equipment foreign to the electrical equipment shall be permitted to be installed in, enter, or pass through.

(2) The ceiling is defined as the structure above. A false ceiling is not to be considered an adequate structure for the purpose of satisfying this criteria.

(3) This dedicated space shall be designated on the electrical and mechanical drawings as a dedicated space by note or by symbol.

i. Electrical service to Army Reserve Centers (ARC's) shall be underground as required in the "Design Guide" for ARC's. The primary will be extended under ground from the property line to a pad-mounted transformer near the mechanical room, and then an underground secondary will be extended into the building. A letter must be furnished (as part of the Concept design analysis) from the power company giving the costs and all their requirements for the complete installation of the underground service. Where an exact cost cannot be furnished, an estimate will be adequate for the Concept. An exact cost, however, must be obtained before the final submittal for inclusion in the specifications as a separate bid item.

j. Fire-Resistant Ceilings. When the false ceiling is used as the fire-resistant ceiling, then the lighting fixtures shall be installed in accordance with Underwriters Laboratories Fire Resistance Directory. The lighting fixture specified shall be classified for fire resistance and will be so noted in the lighting fixture schedule.

k. All air cooled chillers shall be served by a fused disconnect switch. The fuse size shall be as indicated by the name plate on the equipment installed.

l. Electrically Driven Fire Pumps. The designer will ensure that the requirements of NFPA 20 are met in all designs that include fire pumps. In particular, a letter from the installation servicing maintenance engineer agency confirming reliability of the utility service (Para. 6-2.1, NFPA) and calculations that substantiate the starting voltage drop requirements (Para. 6-3.1.3 and 6-3.1.4, NFPA) must be submitted by the designer.

m. The limits of all hazardous areas shall be clearly defined on the drawings. Class, division, and group per the NEC shall be described for each hazardous area. Where different types of hazardous environments are identified within a project design, the designer shall reference each hazardous area to the specific paragraph/article of the NEC appropriate for the treatment of such hazard by note on the drawings. For example, an Army Tactical Equipment Shop would be required to meet the requirements of article 511-Commercial Garages, Repair and Storage. The designers shall also determine where oil-resistant and gasoline-resistant insulation is required within the hazardous area and indicate the requirement for this type of insulation on the drawings as applicable (see article 501-13 of the NEC).

n. In battery storage rooms provide controls that use a sail switch in the exhaust fan airstream and an enclosed contactor to energize the room receptacles only when exhaust air movement is proven.

5.11.4 Fire Detection and Alarm System. The fire detection and alarm system shall comply with the following design guidance where applicable:

a. For Army bachelor enlisted housing, provide detectors (smoke and heat) in accordance with the Architectural and Engineering Instructions Design Criteria

b. The system shall be the type prescribed by the A-E Instructions manual. More specific fire alarm system design guidance is contained in Architectural and Engineering Instructions Design Criteria for Air Force Projects and TM 5-812-1 for Army Projects.

c. Do not show wire sizes or conduit sizes, or the number of conductors in the circuits. These vary among systems and will be shown on shop drawings. The exception to this is the AC power circuit to the control panel and the conduit to the telephone backboard for remote alarm reporting.

d. Show location of all system components on the electrical plans.

e. Provide a Fire Alarm Riser Diagram on the electrical plans showing all the system components and interfaces to other systems (telephone, sprinkler, foam, hood dry chemical, etc.). Unless otherwise directed, fire alarm circuits shall be of the conduit loop system.

f. Individual building fire alarm systems must report to the base fire alarm system over the air waves on an assigned radio transmission frequency, through telephone pairs (provided by others) or through existing fire alarm circuits if a base system is available.

Provide 19 mm (3/4 inch) conduit from fire alarm control panel to the transmitter, telephone backboard or to the fire alarm circuit, as appropriate.

g. The design engineer shall contact the installation personnel responsible for fire protection to determine if the installation has a central fire alarm receiving station that is dependent upon unique coding schemes. The transmission of a fire alarm condition to the central station may require that proprietary equipment be specified. Consult with the Project Manager prior to final design to insure that the proper procedures to specify this equipment are available.

h. Fire alarm control panel primary power shall be from a lockable circuit breaker located in the electrical panel nearest the service entrance. Batteries shall provide the necessary backup power for system reliability.

i. The Contractor does not normally supply the central station receiver module; however, any equipment supplied must be fully compatible with the existing system equipment and if a receiver module is supplied, it must be physically as well as electrically compatible. The designer must determine the make and model of existing equipment and include sufficient information in the specifications and plans to ensure compatibility of the completed system.

5.11.5 Public Address Systems. Public address systems encompass many applications of amplified voice and music used for entertainment and distribution of voice messages. They run the gamut from a speech reinforcement system in a conference room, to a frequency equalized voice and music system for an auditorium, and on to a complex multizone system used for both background music and selective paging by zone with multimedia selectable inputs and area level control with paging override capability. Most systems involve amplifiers, loudspeakers, and a program input. Inputs include microphones, AM/FM tuners, tape decks, and phonographs. Many configurations can be developed using standard equipment to fit any desired operational requirement. Each system is to be designed to meet the user's requirements with the following features considered:

a. In many cases, space limitations dictate the use of wall-mounted amplifiers. Dual voice coil speakers are the preferred type and should be used for background music systems that require voice paging to override the music levels. The use of miniature relays at zone volume controls to override volume control settings for paging should be avoided where possible. In small systems employing relatively short runs of audio bus cable and low power requirements, a 25-volt distribution system should be used. Where long runs with high power requirements are levied on the distribution network, a 70-volt system should be used. The choice of all system components should be based on design calculations. These calculations should begin with the desired sound pressure level to be achieved in each area and be developed through the system to establish component power capacity and wire sizes.

b. Specifications should include sufficient technical data to establish minimum equipment quality levels. This data should include frequency response, distortion, RMS

power capacity, and minimum number and types of controls. Public address systems shall be designed in accordance with guide specification CEGS 16770 RADIO AND PUBLIC ADDRESS SYSTEMS and the EIA standards for sound systems.

c. All-channel paging consisting of paging microphone, push-to-talk switch paging amplifier, and one or more paging relays shall be provided.

5.11.6 Intercom System. Dedicated intercom systems include various combinations of master and slave units with varying quantities of each type unit employed. These systems are called dedicated because their stations and wiring are used only for local intercom voice communication. A contrast is the intercom on the key telephone system which is an auxiliary function of the key telephone equipment. Intercom systems employ two basic types of station selection techniques. One type has rows of switches with each switch dedicated to a particular station that can be called. The other type employs a matrix selection technique where stations are dialed as in a telephone system. The use of dedicated intercom systems is required in some applications but the general guidance furnished to the designer is to attempt to satisfy the user's intercom needs with the administrative telephone system. Many features now available on electronic telephone systems can meet or exceed the user's intercom requirements. When dedicated intercom systems are used, they shall be done in accordance with guide specification CEGS 16721 INTERCOMMUNICATION SYSTEM.

5.11.7 Telephone/Communication System. Unless otherwise specifically directed, a complete telephone/communication system will be provided in the construction plans and specifications using the following design guidance:

a. USAISC and/or MACOM DCSIM agencies are technically responsible for the design of IS whether the design was performed by the USACE element (AE or in-house) or by the above agencies themselves. ER 1110-3-110 outlines the responsibilities of the various agencies. There is some flexibility regarding who performs the design and whether the complete design will be in an MCA construction contract or in a separate contract. Therefore, the designer will receive instructions, usually in the specific instructions, defining his role in the development of the IS design.

b. Technical criteria for voice/data telephone systems is found in TM 5-811-9. In addition to this guidance, the designer shall consult with the Base Director of Information Management (DOIM) on Army installations or Base Communications Office (BCO) on Air Force installations as to the communication requirements for the particular project.

c. Provide a telephone backboard (TBB), two duplex 120V outlets on separate dedicated 20A circuit breakers and a system ground wire. Locate TBB on electrical drawings and on others if necessary for clarity.

d. The TBB should be located in a separate room from mechanical equipment. Adequate working space shall be provided in front of the board. Coordinate space requirements with the base ITBC, DOIM, or BCO office.

e. Conduit from outlet boxes and TBB may be stubbed out into suspended ceiling areas unless restricted to continuous conduit by the local communications officer or because of space use requirements. Install all conduit, boxes, etc. in accordance with guide specification CEGS 16415, ELECTRICAL WORK, INTERIOR. Include text reference where applicable.

f. Show location of telephone outlets on the electrical plans. Include notation or symbol definition to indicate height above finished floor (A.F.F.). Do not show conduit runs on the electrical floor plans.

g. Show Telephone System Riser Diagram on the electrical plans with sufficient information to define type and quantity of conductors (cable), type of instrument and connector and type and quantity of protector devices throughout the system. Size conduit and outlet boxes according to Exhibit A-5-6. (Note that this exhibit is incomplete and does not provide all the information required in this paragraph.)

h. Normally for Army projects a complete telephone system including the wiring, conduit, backboards, protectors, connections, instruments, etc. will be designed for Contractor installation as in any other electrical system. For Air Force projects, some of the communications wiring (the outside plant components) may not be in the design of the project. Design requirements for data, voice, video and other communications systems are usually complex and require special input from the Base Civil Engineer, Base Communication's Officer (BCO), and the user. Therefore, a prewire checklist has been prepared (See Exhibit A-5-7) to assist the designer in gathering the information necessary for development of the communication system. An equivalent checklist has been developed for Army projects and is presented as Exhibit A-5-8. The designer should become familiar with each item on the checklist and should be prepared to discuss each item at the predesign conference.

i. Underground telephone entrance conduit will be shown on the electrical plans beginning at the point of connection to the existing system (manhole or riser pole) and terminating in the new facility. Coordination with all utilities shall be performed to reduce the amount of rights-of-way clearing without increasing the number or the degree of difficulty in utility systems crossing.

j. When involved with a large complex or building (i.e., hospital, medical center, multibuilding complex, etc.), make a determination as early as possible if a private automatic branch exchange (PABX) is or will be planned. PABX installations require special considerations (e.g., space, additional HVAC, vented exhaust systems for batteries, rated walls, hazardous areas, etc). Often the plans for a PABX may not be stated. State any requirements or anticipated plan for a PABX in the concept design analysis along with all data justifying this need. Where PABX units are used, the wiring (and required conduit) completely changes from that shown in the exhibits.

k. In areas where single instruments are used and it cannot reasonably be expected that conversion to key systems will be necessary in the future, individual circuits should be run to the TBB or to an area terminal block with multipair cables from there to the TBB.

Standard 4X2 single gang boxes may be used to accept commercial outlets at instrument locations (see Exhibit A-5-6). Consideration should also be given to reducing the size of the conduits. It should be noted that the exhibits show conduit plans for key systems which employ 25 pair (and larger) cables to each outlet.

5.11.8 Television.

5.11.8.1 Closed Circuit Security Systems. The video security system, where required, shall be integrated into the purpose of the building and into the overall mission of the area. Placement of cameras must be carefully considered in order to avoid dead zones. Zoom lenses and pan-and-tilt devices shall be considered. The system shall consist of camera and monitor components. Camera components shall include cameras, lenses, fixed and remote control camera accessories, camera housing, and environmental options. Monitoring components shall include monitors and monitor mounts.

5.11.8.2 Master TV Antenna (MATV) Systems. A thorough survey shall be made of the signal strengths of each channel available at the proposed site. The location of amplifiers and boosters shall be indicated to ensure proper signal levels throughout the system. Additional provisions shall be made for radiation-proof installations where leakage might interfere with other circuit transmissions. Channel selection for closed circuit TV operating on a coaxial cable system with a MATV system will be done to ensure there is no interference (adjacent channel, co-channel, etc.) with the MATV channels.

5.11.8.3 Cable Television Systems (CATV). The CATV shall be a prewired system for Air Force projects and a conduit system only for Army projects. A 50 mm (2-inch) empty entrance conduit shall be installed for all projects for future installation of service cable by the using agency. Provide a 19 mm (3/4 inch) plywood backboard with sufficient space for the distribution cable terminations, amplifiers, and splitters. The systems shall include cables from the backboard to each outlet, connectors on outlet plates and sufficient spare cable at backboard for future connection to splitters. All empty conduits shall have pull wires. Specifications will be included in guide specification CEGS 16415, ELECTRICAL WORK, INTERIOR.

5.11.9 Intrusion Detection Systems (IDS). An intrusion detection conduit system, when required, shall be provided using the following design guidance:

a. Only conduit systems, including junction boxes, terminal boxes and related equipment may be considered for construction funding.

b. System layout and requirements will be furnished by the using agency, usually after the concept submittal, for inclusion in the plans and specifications.

c. Unless otherwise noted, sensors, control units, monitors, power supplies, transmitters, receivers, RF filters and tamper switches will all be furnished and installed by the using agency unless specifically funded on the project's 1391.

d. All conduits shall be installed in accordance with CEGS 16415, ELECTRICAL WORK, INTERIOR. Signaling cables may also be installed, but the using agency must supply the wire types and sizes, number of conductors, etc., to the designer along with the other information at the concept submittal.

e. Plans shall show locations of sensor outlets and spaces for the control and monitor panels and be keyed to a legend in the electrical drawings.

f. Proper notations shall be made indicating that the system devices are "not included in this contract."

g. A riser diagram shall be included.

h. If IDS equipment is to be Government-furnished, Contractor-installed, the designer will be required to provide wiring diagrams to show connections of equipment components to each other as detailed in TM 5-6350-264-14/14.

i. A lockable circuit breaker shall be reserved for the IDS system primary power connection in the 120V power panel located nearest the service entrance.

j. If the IDS system requires a data transmission cable to a central monitoring station, a 13 mm (1/2 inch) conduit with pull wire shall be installed from the IDS control panel to the telephone backboard. EMT may be used if both are inside the protected area.

k. All signal conductors outside component enclosures must be enclosed in rigid, heavy wall conduit or intermediate metal conduit (IMC). Power cable from the control unit and the monitor cabinet to their respective junction boxes may be in electrical metallic tubing (EMT).

5.11.10 Hospital Communication Systems. Hospital systems are very special designs, and specific requirements should be provided for each project. Hospital systems include nurse call, central dictation, patient monitoring, radio and public address, CATV or MATV, radio paging, telephone, etc.

5.11.11 Special Grounding Systems.

5.11.11.1 General. Special grounding systems, such as for computer and electronic equipment; for lightning protection of sensitive electronics equipment, such as radios and communication equipment; and for EMI/RFI shielding shall be designed in accordance with project criteria. A common grounding system can be utilized when practical for all grounding needs. When separate ground systems are provided, all grounding systems shall be tied together below grade, unless otherwise directed. The surface area and lateral extent of the ground electrode in the earth, and resistivity of the earth are major factors in determining the effective resistance of the combination, known as the electrode ground resistance. Frequently, a single electrode of even the maximum practical dimensions will not provide acceptable electrode ground resistance. In such cases, additional electrodes must be added, all connected together.

5.11.11.2 Qualifications. A design specialist will be required by the Specific Instructions for certain special grounding systems. When so indicated, field work, analysis, and design must be accomplished by or under the direct supervision of an engineer having at least 3 years' experience in the design of special type grounding systems and shall have successfully completed at least 10 projects of similar nature. Proof demonstrating the above shall be submitted. The expert may be a consultant hired especially for the particular project or may be a regular employee of the design firm, but his credentials must be acceptable in the judgment of the Contracting Officer.

5.11.11.3 Description of Analysis Work.

5.11.11.3.1 The designer will conduct measurements in a number of areas to determine the location, number and length of ground rods to provide the required ground resistance.

5.11.11.3.2 The designer shall clearly define areas that could create corrosion problems and necessitate the need for cathodic protection, due to installation of the grounding system.

5.11.11.4 Design of a Ground System. Reference IEEE Std 142 for additional design guidance on grounding systems.

5.11.11.4.1 The specifications and drawings shall completely reflect all of the design requirements. The specifications shall require field tests (in the construction phase) witnessed by the Government, to determine the effectiveness of the grounding system.

5.11.11.4.2 The design must include drawings, showing existing construction. Verification of the validity of any existing drawings and/or any other data furnished by the Government shall be the responsibility of the engineering services firm.

5.11.11.4.3 The designer shall provide a cost estimate of the grounding system. This will include all construction and testing cost related to installation of the grounding system. The estimate shall be a detailed estimate showing equipment, labor, excavation, etc.

5.11.12 Radio Frequency Shielding.

5.11.12.1 General. RF shielding may be required in project criteria for a variety of reasons including TEMPEST, to protect sensitive electronic equipment of unwanted electrical noise, and to protect certain critical electrical/electronic equipment from the electromagnetic pulse (EMP) from nuclear explosions. The application and the criteria for the specific project will determine the type of shielding required. The design of anechoic chambers may also be required and should follow the same guidelines outlined herein.

5.11.12.2 Qualifications. The design of RF shielding is very specialized. The designer shall therefore employ the services of an expert in the area of RF shielding and/or anechoic design. The expert must have at least 3 years of experience in the design and construction of RF shielded facilities and shall have successfully completed at least 10 projects of a

similar nature. Proof demonstrating the above shall be submitted for approval. The expert may be a consultant hired especially for the particular project or may be a regular employee of the design firm.

5.11.12.3 Design Guidance. If not contained in the Project Data Book, the designer will be provided the frequency and attenuation requirements at the predesign conference. Some technical requirements may be contained in classified documents but usually the pertinent information can be extracted and given the designer without requiring access to the documents. If access is required, the designer will be so informed prior to the beginning of the contract.

5.11.12.3.1 All walls, floors, and ceiling in the shielded areas must be shielded.

5.11.12.3.2 All shielded areas shall be clearly shown on plans, elevations, sections, details, etc., as necessary to convey the location and extent of the shielding.

5.11.12.3.3 The consultant shall select the type of shielding materials to be used taking into consideration the shielding criteria, the ease of construction, the architectural and functional features of the facility, and the cost. For facilities having shielding requirements greater than 50 dB, copper or steel foil shall not be used as shielding material. Under no circumstance shall aluminum foil be used.

5.11.12.3.4 The consultant shall coordinate all disciplines having work in the area of the shielding at the earliest possible time so that accommodations can be made for all penetrations of the shield. In this regard, every pipe, wire, door, air conditioning duct, etc., that passes through the shield must be considered and treated at the penetration point with the dielectric connectors outside the shield and wave-guided penetration specified. Every point of penetration shall be planned and indicated on the drawings with typical details of each type penetration.

5.11.12.3.5 The design should limit as much as practical the number of penetrations. For example, if a sprinkler system is required, penetrate with one large pipe and branch within the shield instead of branching outside the shield and having several small penetrations. Minimize the number and size of doors and windows.

5.11.12.3.6 Unless otherwise directed, the shield should be an electrically continuous bonded metallic enclosure electrically isolated from the building safety ground and all other grounds except at a single specified connection point located as near as possible to the power filters. Grounding wire should be a minimum No. 4/0. The shield should be grounded before power is applied to filters.

5.11.12.3.7 Care must be made not to allow nails, screws, or other type of attachment devices to damage the shielding material, which is very often a thin metallic screen or foil. Therefore, the design shall address the mounting or attaching of all fixtures and materials to the RF shielded surfaces. These include conduit, pipes, J-boxes, outlets, switches, light fixtures, etc.

5.11.12.3.8 All shielded construction is to be specified in one section of the specifications, normally under Division 13, Special Construction. In preparing specifications, special care must be taken to ensure that only items that are commercially available as standard equipment are specified. Also at least two manufacturers shall be able to supply each item to avoid sole source claims. Cross references and coordination shall be made between this section and the following sections as required:

a. Electrical Specification. Reference is to be made that all electrical power and wiring for shielded room is to be brought into the room through power line filters which are supplied under Division 16 of the specifications. Also, reference is to be made that dielectric coupling on the conduit is to be used before attaching to the filters. In addition, under the electrical section, reference is to be made that all rooms are to be grounded from the ground stud on the room to the low resistance ground (5 ohms or less).

b. Mechanical Specification. Reference is to be made that all piping to the room is to be brought through wave guide penetrations. Wave guide penetrations will be provided under Division 15 of the specifications. Also, reference is to be made that dielectric couplings are to be used before attaching pipes to wave guide penetrations.

c. HVAC Specification. Reference is to be made that all duct work to the shield room is to be attached to the collars which are provided under Division 15 of the specifications by use of nonmetallic flexible duct connectors. Filtering of control wiring entering the shielded area should also be noted.

d. Door and Hardware Specification. Reference is to be made that doors, hardware and frames in all shielded rooms will be provided under Division 13 of the specifications.

5.11.12.3.9 In addition to the specification of the shielding hardware, tests showing compliance with MIL-STD-285 shall be required. These tests may consist of (1) a qualification test performed prior to the shielding being covered with any additional finishes; (2) acceptance test performed just prior to occupancy by the owner. Tests shall be witnessed by a representative of the Contracting Officer.

5.11.12.3.10 The Contractor providing the materials and services under Division 13 shall provide proof to the Contracting Officer of acceptable qualifications and experience prior to performing the work.

5.11.13 Cathodic Protection.

5.11.13.1 General. It has become increasingly important that metal in soil be protected from corrosion to prevent waste, hazardous conditions, or contamination of soil. Other factors are considered important, such as forecasted life of structures. Coatings, selection of material and cathodic protection are used on underground structures to prevent corrosion.

5.11.13.2 Corrosion Control and Cathodic Protection. For all steel facilities located in the atmosphere, soil, or water electrolytes, corrosion control shall be provided. In all

instances, cathodic protection or approval to omit it shall be provided for metals in soils or water. For small sections of pipe 0-122 m (0-400 ft) or small tanks 15 000 L (4,000 gallons) or less, an abbreviated specification may be used. Coatings are normally provided as corrosion protection in the atmosphere. Some of the facilities requiring cathodic protection are as follows:

Water tanks on or underground
Underground metal tanks, piping and ancillary items
Underground metal lift stations
Underground metal pipes - all types
Treatment plants (components in contact with soil or liquids)
Inside of tanks with fluids

5.11.13.3 Qualifications. Field work, analysis, and design must be accomplished by or under direct supervision of an engineer licensed in corrosion engineering, a technologist, or a specialist certified by NACE. He must be available to answer questions relating to his work.

5.11.13.4 Description of Analysis Work.

5.11.13.4.1 The Corps of Engineers will conduct soil resistivity measurements in a number of areas to provide the designer data necessary to determine the size and type of cathodic protection for structure protection. The data is provided in the Foundation Report (see Chapter B-1, GEOTECHNICAL). Any additional data or guidance should be requested with the concept submittal. The designer is required to obtain any additional resistivity data he may require to complete his design.

5.11.13.4.2 The designer will conduct current requirement test as required.

5.11.13.4.3 The designer must clearly define areas that will be protected and the area that could be affected by interference and steps to be taken to ensure other structures (pipes, tanks, etc.) are protected from interference.

5.11.13.4.4 Provide sufficient and properly located electrical bonds, electrically insulating devices, and corrosion control test stations to ensure adequate allowance for periodic review and examination of the system.

5.11.13.5 Design of Cathodic Protection.

5.11.13.5.1 A general guide specification shall be used, but it must be tailored to the design application.

5.11.13.5.2 This design shall clearly provide a thorough and comprehensive specification and drawing (including standard drawings available in guide). The expected results shall be proved by field test (during the construction phase) witnessed by the Contracting Officer.

5.11.13.5.3 The design must include applicable drawings, as available, showing existing construction. Verification of the validity of these drawings and/or any other data furnished by the Government shall be the responsibility of the designer's firm.

5.11.13.5.4 The designer shall provide an updated cost estimate of the cathodic protection system. This will include all construction and testing costs related to installation of cathodic protection. The estimate shall be a detailed estimate showing equipment, labor, excavation, etc.

5.11.13.5.5 The design plans and specifications will show the extent of the facilities to be protected, location and type of anodes, location of test points and details for sectionalizing an underground piping system. This design shall be complete enough to purchase equipment and build without design changes to meet criteria of protection.

5.11.13.6 Criteria of Protection. Criteria shall be as specified in guide specifications CEGS 13110 CATHODIC PROTECTION SYSTEM (SACRIFICIAL ANODE); CEGS 13111 CATHODIC PROTECTION SYSTEM (STEEL WATER TANKS); and/or CEGS 13112 CATHODIC PROTECTION SYSTEM (IMPRESSED CURRENT) as appropriate.

5.11.14 Energy Conservation. Energy conservation shall be considered in the project design. The designer shall carefully consider his selection of light sources and control schemes which are both cost and energy conservative. Electronic ballasts with T-8 fluorescent lamps are recommended for most commercial type applications. Careful consideration shall be given to equipment ratings so that operation is at its most efficient point. The electrical engineer shall closely coordinate with the mechanical engineer to select motors of proper efficiencies and ratings for the equipment to be driven. The choice of lighting levels within criteria shall be carefully made and task lighting shall be considered where possible. Advantage shall be taken of natural illumination where feasible. Use the highest distribution voltage consistent with economics and safety. Contacts with the installation personnel should identify any known rebate programs offered by utility companies respecting energy saving opportunities.

5.11.15 Seismic Protection. All projects will include appropriate provision for protection of electrical equipment against damage from seismic events in accordance with TM 5-809-10 (AFM 88-3, Chapter 13), Seismic Design for Buildings. Normally these requirements can be satisfied by inclusion of guide specifications CEGS13080 SEISMIC PROTECTION FOR MISCELLANEOUS EQUIPMENT and/or 16070 SEISMIC PROTECTION FOR ELECTRICAL EQUIPMENT in the contract specifications. The editing of this specification should be coordinated with the mechanical designer.

5.11.16 Technical Requirements for Nonlinear Loads. Designs for facilities having nonlinear loads shall be in accordance with ETL 1110-3-403, Electrical Power Systems For Non-Linear Loads. Per the requirements of paragraphs 4c and 4g, the use of 75-degree C. (minimum) conductors is required and must be shown as such on the drawings. Branch circuits within the building which serve systems furniture with nonlinear loads shall be 3#12, 1#10 N, 1#12 GND, and 1#12 isolated GND. Otherwise, branch circuits serving nonlinear loads shall have phase conductors with individual neutral conductors. Feeders

serving panelboards with nonlinear loads shall have the neutral conductor ampacity based on at least 1.73 the ampacity of the phase conductors. The simplest way to accomplish this is a double ampacity neutral or parallel neutrals in sizes allowed by the National Electrical Code.

5.11.17 Local Area Networks (LAN).

The design for Local Area Networks shall be included for all Air Force projects as provided for in the RAMP. The basic design will be accomplished by the Air Force and provided to the designer for inclusion in the project. All LAN outlets installed in prewired work stations shall be wired continuous from the outlet to the backboard, multitap, etc., depending on the type of system installed.

5.11.18 Leak Detection For Underground Storage Tanks.

5.11.18.1 Leak detection must be provided for underground storage tanks and piping which will contain petroleum products or other hazardous material. The designer shall provide power to leak detector devices addressed by the mechanical systems designer.

5.11.18.2 Specifications for the leak detection system shall be included in the specification section containing the tank and piping. Refer to guide specification CEGS 13202 FUEL STORAGE SYSTEMS. Locations of the control panels, cables, conduits, alarms, and all other electrical details associated with the leak detections system shall be shown on the electrical drawings.

5.11.19 Year 2000 (Y2K) Compliance.

5.11.19.1 The A-E shall insure that the hardware, firmware, software and information technology systems separately or in combination with each other or other elements specified in the documents developed under this contract shall be year 2000 compliant in accordance with Federal Acquisition Register (FAR) 39.106.

5.11.19.2 The following requirement shall be added to the General Requirements paragraph in Part 1 of any specification that describes equipment subject to the year 2000 compliance requirements. The contractor shall ensure products provided under this contract, to include hardware, software, firmware, and middleware whether acting alone or combined as a system are year 2000 compliant in accordance with Federal Acquisition Register (FAR) 39.

5.11.19.3 See ETL 1110-3-492 for additional information and specification requirements.

5.11.20 Metric Drawings. Exhibit A-5-9 shall be provided on electrical drawings to indicate metric sizes to be used for electrical conduit.

CHAPTER A-5

ELECTRICAL POWER, LIGHTING, GROUNDING,COMMUNICATIONS AND ALARM SYSTEMS EXHIBITS

A-5-1 CONNECTED LOAD

A-5-2 CONCEPT LIGHTING SCHEDULE

A-5-3 CONCEPT SPECIAL POWER OUTLET SCHEDULE

A-5-4 LIGHTING FIXTURE SCHEDULE

A-5-5 PANEL SCHEDULE

A-5-6 TYPICAL TELEPHONE RISER DIAGRAM

A-5-7 DESIGN CHECKLIST FOR TELEPHONE PREWIRING

A-5-8 USER REQUIREMENTS CHECKLIST CONNECTED LOAD

A-5-9 NEMA APPROVED METRIC SIZE DESIGNATIONS

CONNECTED LOAD				
LOAD		KVA		TOTAL
		1 PHASE	3 PHASE	
LIGHTS				
RECEPTACLES				
POWER	HEATING			
	VENTILATING			
	AIR CONDITIONING			
	OTHER			
TOTAL				

ASSUME HORSEPOWER EQUALS KVA)

CONCEPT LIGHTING SCHEDULE

Room and/or Number	Foot Candles	Fixture		Basis of Design	Notes
		Type*	Voltage		

* See OCE Standard Drawing 40-06-04 dated February 1991 for fixture types.

CONCEPT SPECIAL POWER OUTLET SCHEDULE						
ROOM AND/OR NUMBER	PHASE	VOLTAGE	AMPS	FREQUENCY (Hz)	HAZARDOUS CLASSIFICATION	NEMA CONFIGURATION

EXHIBIT A-5-3

LIGHTING FIXTURE SCHEDULE

Purpose: The purpose of the lighting fixture schedule is to indicate the lighting fixtures required by the designer. Lighting fixtures required by the designer and not included in the Corps of Engineers Standard Drawings 40-06-04 must be detailed.

The coefficient of utilization shown in the lighting fixtures schedule is taken from the coefficient of utilization table RCR =1 and ceiling, wall and floor reflective equal to 80%, 30% and 10%, respectively. This is not the coefficient for any specific room in the design with the above mentioned reflectance, unless the room happens to have a room cavity of one.

LIGHTING FIXTURE SCHEDULE												
CONTRACT DRAWING FIXTURE MARK	DWG. NO. 40-06-04		LAMP			FIXTURE VOLTAGE	ZONAL CAVATY METHOD RCR=1				SPACING TO MTG. HGT RATION	NOTE NO.
	TYPE	SHEET NO.	TYPE	NO.	WATTS		EFFICTIVE REFLECTANCE			COEF OF UTIL		
							CLG.	WALL	FLOOR			
NOTES: 1. 2.												

EXHIBIT A-5-4

PANEL _____ TYPE _____ MAIN BUS RATING _____

MAIN BREAKER: NO. OF POLES _____ FRAME _____ TRIP _____ TYPE _____

VOLTAGE _____ MINIMUM BREAKER INTERRUPTING CAPACITY (RMS SYM AMPS) _____

DEVICE		BRANCH CIRCUITS			PHASE LOAD (VOLTS –AMPS)			BRANCH CIRCUITS			DEVICE	
AMPS TRIP	POLES	DESIGNATION	VOLTS-AMPS	NO.	ΦA	ΦB	ΦC	NO.	VOLTS-AMPS	DESIGNATION	POLES	AMPS TRIP
TOTAL								TOTAL CONNECTED LOAD _____ TOTAL DEMAND LOAD _____				

EXHIBIT A-5-5

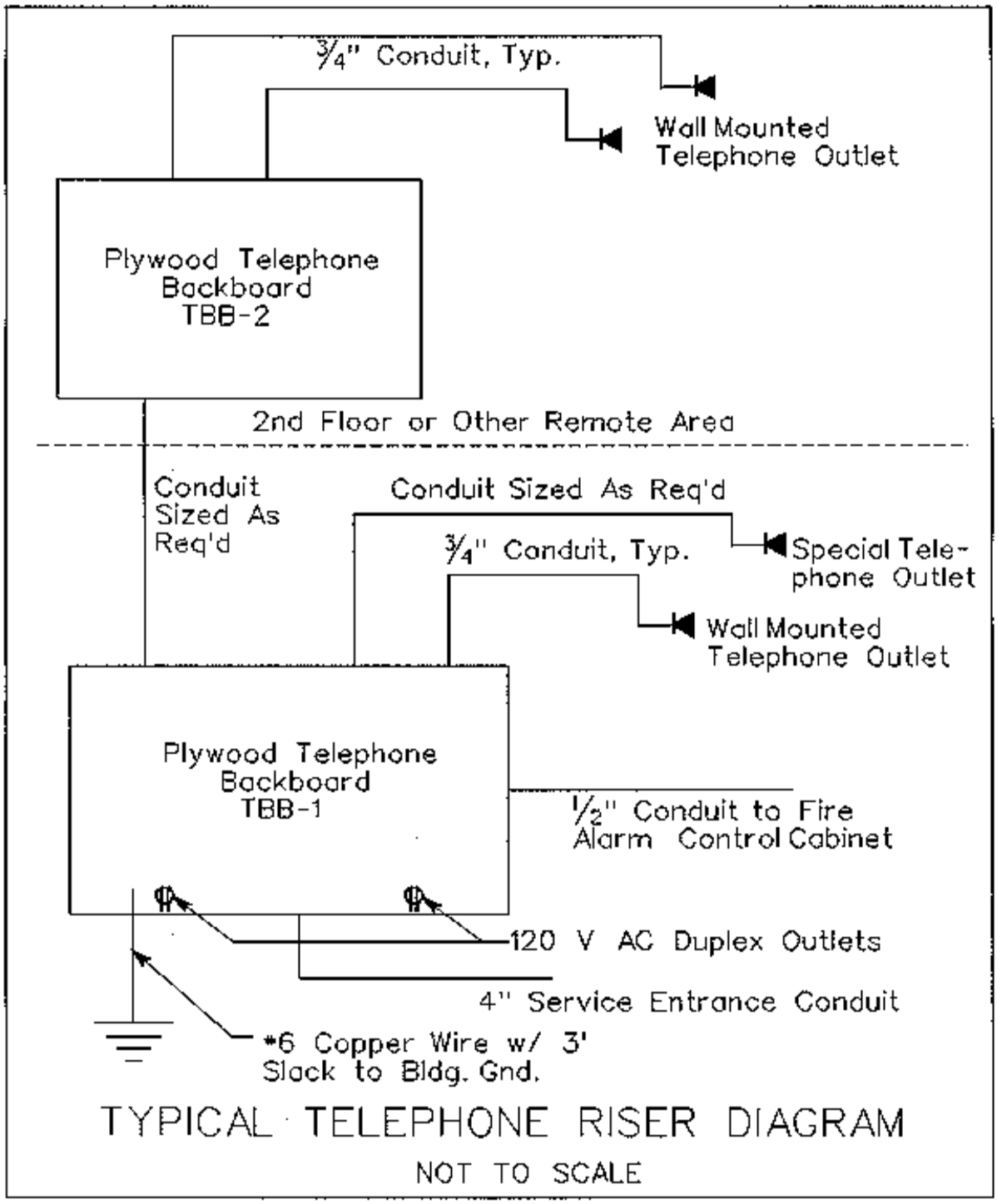
3/4" Conduit, Typ.
Wall Mounted Telephone Outlet
Plywood Telephone Backboard TBB-2
2nd Floor or Other Remote Area
Conduit Sized As Req'd
Conduit Sized As Req'd
3/4" Conduit, Typ.
Special Telephone Outlet
Wall Mounted Telephone Outlet
Plywood Telephone Backboard TBB-1
1/2" Conduit to Fire Alarm Control Cabinet
120 V AC Duplex Outlets
4" Service Entrance Conduit
#6 Copper Wire w/ 3' Slack to Bldg. Gnd.
TYPICAL TELEPHONE RISER DIAGRAM
NOT TO SCALE

Design Checklist
for
Telephone Prewiring

1. This checklist covers a proposed approach to deal with this issue and includes some recommended procedures to ensure that the required background information needed to design the "prewiring" portion of the Air Force projects is obtained. The intent is also to ensure that all agencies assigned responsibility for action accomplish that action and do it in a time frame that assists rather than frustrates the design effort.

2. The Base Communications Officer (BCO) is responsible for providing criteria for prewiring a facility. He is to identify all communications (COMM) requirements to the Base Civil Engineer (BCE) for inclusion into the 1391 and the RAMP.

3. The COE Project Manager and the engineer should carefully review the RAMP and during the prenegotiation conference at the base, both should go over that in detail with the BCO and the BCE representatives. At that time, all COMM systems which are candidates for prewiring shall be identified and the data in the RAMP verified and expanded as necessary. Some of the area to be covered and questions to be raised are included below:

A. What type of telephone system will serve this facility?

(1) Will the facility be served directly from an electronic Base Dial Central Office (DCO)? _____Y/N

(2) Will the facility have an Internal Private Automatic Branch Exchange (PABX)? _____Y/N

(3) A 1A2 Key System? (uses 25 pair cables per outlet) _____Y/N

(4) An electronic (Hybrid) key system? (uses two- or three-pair cables per outlet) _____Y/N

(5) BCO must identify the locations of all key telephone equipment and identify the type of telephone (single line or multiline key type) at each outlet location.

(6) BCO must provide the location for each telephone outlet and its type or provide review comments on the AE's proposed location in early design submission.

(7) Verify type of cable to each outlet and advise A-E to show that on the floor plans. Data should include gauge, pair count, and type of wire.

(8) Must determine if an overhead or an underfloor raceway system will be used and the type of raceway system.

(9) Verify size of the communication equipment rooms based on type and size facility. Verify the AC service requirements for the facility using the same reference.

(10) Verify the number and size of cross connect closets based on type and size facility.

(11) Ask the BCO to provide any unique grounding requirements for the telephone system and to furnish the required impedance of the ground system.

(12) Ask the BCO to identify the point of connection (manhole, aerial drop to underground conduit, etc.) for the telephone service tie cables to connect the facility to the base DCO.

(a) How many pairs are required?

(b) Is duct existing or will ductbanks and manholes have to be built?

(c) What are BCO recommended sizes for each of these?

(d) What type of primary surge protectors are required for the service entrance cables?

B. Is there a Broadband Cable System (BCS)? _____Y/N

(1) Identify locations and type (floor, wall, etc.) of outlets for the system.

(2) Verify system bandwidth and identify any of the systems that may share the cable (CATV, CCTV, data nets, etc.) so any unique interface requirements can be met.

(3) Will the BCS be a dual cable system or a single cable using midband split configuration, etc?

(4) Determine contact in the Air Force EI organization who will provide design assistance to the A-E.

(5) Ask the BCO to verify type of raceway system and its location (overhead or underfloor).

C. Are there any COMM Systems? _____Y/N

(1) Ask the BCO and BCE representative to identify any other systems that are to be prewired.

(2) Cover all COMM systems mentioned in paragraph 18-17 and any other the BCO identifies.

(3) Establish all of the criteria for each COMM system as developed for telephone and BCS system in paragraph 3A and 3B above.

D. Conduit.

(1) Is rigid steel conduit required for all COMM systems? _____Y/N

(2) Will conduits be home run back to the COMM closets or will they be stubbed into the ceiling?

4. Discuss design review responsibility and design implementation procedures and ensure points of contact are identified for each agency for coordination and action. Identify the COMM system needs at the prenegotiation conference, assign persons responsible to obtain data and to accomplish actions, set milestones and then ensure they are met. Milestone notices and many followup actions by the COE Project Manager to ensure all tasks are completed will be necessary to get this new system cranked into both agencies' way of doing business.

USER REQUIREMENTS CHECKLIST

1. GENERAL:

The user requirements checklist is to be utilized as a guide to assist the designer in developing user requirements for an MCA project.

2. PROJECT INFORMATION:

LOCATION:_____MCA PROJECT #:_____
FY-____ LI_____ USACE DISTRICT:_____
PROJECT NAME:_____

a. What is the distance from the project to:
The DCO?_____ft. Nearest interface?_____ft.

b. What is the point of the nearest interface:
Building #?_____ Manhole?_____ Pole #?_____ Cable #?_____

c. What distance will the new circuits be required to be run:
Buried?_____ft. Aerial?_____ft. Underground?_____ft.

d. Can the project be supported by the installed switch for the expansion: New switch? Y/N_____ Ports required? #_____

e. Is there likely to be future growth in the area of the project that will require additional circuits? Y/N_____

f. Are there any secured circuits required? Y/N_____

g. Are there any special use circuits required? Y/N_____
Alarm? Y/N____ EMCS? Y/N____ Fire? Y/N____ Other? Y/N____
(If yes, specify)_____

h. How many telephones are required:
2,500? #_____ 500? #_____ Special feature? #_____

i. Are there sufficient numbers of available circuits to support the project at the interface point:
Fiber? Y/N_____ Copper? Y/N_____

j. How many additional circuits will be required to support the project from the DCO:
Fiber? #_____ Copper? #_____

k. How many outlets are required in the project:
Telephone? #_____ Data? #_____ Television? #_____

l. Is there a requirement for television? Y/N_____
Headend equipment? #_____ Amplifiers? #_____
Distribution cable? #_____ Feeder cable? _____ft.

m. Is there a requirement for a Local Area Network? Y/N_____
How many stations? #_____

n. What type of LAN is required: Ethernet? Y/N_____
AT&T ISN? Y/N_____ Starlan? Y/N_____ Other?_____

o. Is there any house wiring required? Y/N____
_____ft. Type_____

p. Is there a visual information requirement? Y/N____

q. Is there a supporting equipment requirement not covered above?
Y/N____ (If yes, specify)_____

r. Are there any unique requirements not considered? Y/N____
_____

NEMA APPROVED METRIC SIZE
DESIGNATIONS
(ELECTRICAL CONDUIT)

USA TRADE SIZE	METRIC SIZE DESIGNATIONS
1/2"	16 mm
3/4"	21 mm
1"	27 mm
1-1/4"	35 mm
1-1/2"	41 mm
2"	53 mm
2-1/2"	63 mm
3"	78 mm
3-1/2"	91 mm
4"	103 mm
5"	129 mm
6"	155 mm

CHAPTER A-6

FIRE PROTECTION

6.1 GENERAL
- 6.1.1 Scope
- 6.1.2 Purpose
- 6.1.3 Qualifications of Fire Prevention Engineer
- 6.1.4 Required Design
- 6.1.5 Critical Projects

6.2 APPLICABLE PUBLICATIONS

6.3 PRECONCEPT SUBMITTAL REQUIREMENTS

6.4 CODE 3 DESIGN REQUIREMENTS

6.5 CONCEPT/EARLY PRELIMINARY (35 PERCENT) DESIGN SUBMITTAL REQUIREMENTS

- 6.5.1 Concept/Early Preliminary Design Analysis
- 6.5.2 Concept/Early Preliminary Fire Prevention/Life Safety Drawing(s)
- 6.5.3 Concept/Early Preliminary Fire Prevention Engineer Certification

6.6 SIXTY PERCENT SUBMITTAL REQUIREMENTS

6.7 PRELIMINARY DESIGN SUBMITTAL REQUIREMENTS (FORMAL 60% SUBMITTAL)

6.8 FINAL (100 PERCENT) DESIGN SUBMITTAL REQUIREMENTS

- 6.8.1 Final Design Analysis
- 6.8.2 Final Fire Prevention/Life Safety Drawing(s)
- 6.8.3 Final Fire Prevention Engineer Certification
- 6.8.4 Final Specifications

6.9 CORRECTED FINAL DESIGN SUBMITTAL REQUIREMENTS

- 6.9.1 Notice
- 6.9.2 Compliance

6.10 REQUIREMENTS FOR DESIGN/BUILD RFP PACKAGES

CHAPTER A-6

FIRE PROTECTION

6.1 GENERAL.

6.1.1 Scope. This chapter provides general guidance for the preparation and development of the Fire Prevention/Life Safety design.

6.1.2 Purpose. Fire Protection design is to establish optimum safeguards against loss of life and property by fire, consistent with the mission, risk involved, and economic utilization. Design shall be coordinated with the Architectural, Structural, Environmental, Electrical, and Mechanical sections. The minimum requirement shall conform to the applicable standards contained in the current National Fire Code, published by the National Fire Protection Association (NFPA), and other criteria referenced in paragraph APPLICABLE PUBLICATIONS. In case of conflict between NFPA codes and other criteria referenced hereinafter the following shall govern: for Army Projects, the Architect and Engineering Instructions; for Air Force Projects, AFR 88-15; followed for both Military services by the MIL-HDBK-1008C. The NFPA codes are not the final criteria for Fire Protection design unless the other referenced criteria so state or those criteria do not address an issue.

6.1.3 Qualifications of Fire Prevention Engineer. The design of Fire Protection features shall be by a registered Professional Engineer or Registered Architect who is a full "Member" - in good standing - of the Society of Fire Protection Engineers (SFPE) or by an individual who is a registered Fire Protection Engineer and whose principle duties are Fire Prevention Engineering. The Fire Prevention Engineer shall certify in written form that the design meets the NFPA and other referenced codes and criteria as applicable to the project under design. The name and credentials (education and experience) of the Fire Prevention Engineer shall be submitted with the initial contract documents and approved by the District Fire Protection Engineer prior to issuance of the Notice To Proceed.

6.1.4 Required Design. A Fire Protection design is required and shall be included in every project. Sufficient copies of the design submittals shall be provided for submission to Architectural, Structural, Environmental, Electrical, Mechanical, and Energy Analysis Sections for review.

6.1.4.1 Design Analysis. A Fire Protection design analysis is required for every project and shall include the following:

a. Type of construction (including interior finish materials).

b. Classification of occupancy.

c. Building separation or exposure protection.

d. Fire protection criteria.

e. Location of all fire-rated walls including fire-rated doors and dampers with identification as to application (fire walls, fire partitions, and smoke partitions, with their fire resistive ratings).

f. Life safety provisions (exit travel distances, exit unit widths based on the capacity and occupant load, horizontal exits, exit signs, and lighting).

g. Automatic extinguishing systems (identification of all sprinklered areas and areas protected by other automatic suppression systems).

h. Water supplies.

i. Smoke control system. (Smoke compartments and the requirements for smoke dampers, smoke detectors, and smoke partitions shall be provided. The smoke control system shall be delineated by schematic diagram, when applicable, indicating the operations of the normal HVAC mode and the smoke removal mode.)

j. Fire alarm system (type of alarm system and location of the fire alarm equipment, and the fire zones.)

k. Fire detection system (type of detection system and location of detectors, and fire zones.)

l. Location of fire extinguisher cabinets and fire hose standpipes.

m. Interior finish ratings.

6.1.4.2 Fire Prevention/Life Safety Drawing(s).

6.1.4.2.1 A separate Fire Prevention/Life Safety floor plan drawing(s) shall be submitted for all projects that are:

a. Places of assembly, or

b. Educational or institutional type facilities, or

c. Commissaries or any other buildings exceeding 930 m^2 (10,000 square feet) in gross area, or

d. Three stories or greater above grade, or

e. As required by the Specific Instructions.

6.1.4.2.2 This drawing shall show at least the following items of interest to Fire Protection/Life Safety personnel. This drawing(s) is to be labeled “to be used as reference only”. A statement is to be made on the drawing that it is not part of the construction contract and that all information contained on it is called for elsewhere.

a. Location and hourly rating of fire and smoke carriers (walls).

b. Location of exit paths and the maximum travel distance of each.

c. Fire hazard and occupancy classification.

d. Building construction type as to its fire resistance capability.

e. Exit units required and at each exit, the number of exit units available.

f. Location of hand-held fire extinguisher and fire hose cabinets.

g. Location and description of automatic sprinkler system.

h. Location of building sprinkler entrance.

i. Number of gpm per square foot by sprinkler system to each area.

j. Location and notation of class of stand-pipe systems.

k. Location of all smoke and fire detectors and a statement of their type.

l. Location of manual pull boxes and audible/visual signaling devices.

m. Description of any special fire protection features.

6.1.4.3 Fire Prevention Engineer's Credentials. A copy of the Fire Prevention Engineer's credentials and the approval provided by Savannah's District Fire Protection Engineer shall be a part of each required fire protection submittal.

6.1.5 Critical Projects. Projects identified as "Critical Projects" shall have a complete, fully detailed design of all Fire Protection, Detection, and/or Life Safety Systems. Critical Projects include the following facilities:

a. Medical facilities.

b. Aircraft maintenance and storage facilities.

c. Engine test cells/areas.

d. Missile assembly facilities/areas.

e. Ordinance facilities or exposed explosives areas.

f. Facilities which include significant data processing/telecommunications systems, as defined by AR 380-380.

g. POL facilities.

h. Flight simulators/Computer based training facilities.

i. Warehouses with high piled or high rack storage.

j. JSOC/SOTF facilities.

k. Mission essential facilities.

l. Any facility occupied (during normal working or sleeping times) by 100 or more persons.

6.2 **APPLICABLE PUBLICATIONS**.

Architectural and Engineering Instructions, Design Criteria, 3 July 1994

MIL-HDBK-1008C	Fire Protection for Facilities - Engineering, Design, and Construction
UBC	Uniform Building Code
NFPA	National Fire Codes (NFC)
MIL-HDBK-1190	Facility Planning and Design Guide
MIL-HDBK-1191	Medical and Dental Treatment Facilities Design and Construction Criteria
ETL 1110-3-484	Design and Construction of Foam Fire Protection Systems to Protect Aircraft in Hangars - U.S. Army
ETL 98-7	Fire Protection Engineering Criteria - New Aircraft Facilities - U.S. Air Force
TM 5-813-6	Water Supply for Fire Protection

6.3 **PRECONCEPT SUBMITTAL REQUIREMENTS**. No requirements for this section.

6.4 **CODE 3 DESIGN REQUIREMENTS**

6.5 **CONCEPT/EARLY PRELIMINARY (35 PERCENT) DESIGN SUBMITTAL REQUIREMENTS**.

6.5.1 Concept/Early Preliminary Design Analysis. A consolidated submittal is required to include features of paragraph Design Analysis. Submittal shall comply with the requirements of this chapter and Chapters A-2, STRUCTURAL; A-3, ARCHITECTURAL; A-4, MECHANICAL; A-5, ELECTRICAL; A-7, ENERGY ANALYSIS (if necessary); and A-8, ENVIRONMENTAL.

6.5.2 Concept/Early Preliminary Fire Prevention/Life Safety Drawing(s). This drawing (if required) shall contain all the project features required in paragraph Fire Prevention/Life Safety

Drawing(s), for review. The drawing does not have to be in final form for this submittal. However, changes in content shall not be made except by the direction of Savannah District technical personnel through the Project Manager.

6.5.3 Concept/Early Preliminary Fire Prevention Engineer Certification. This submittal shall include written certification by the A-E's Fire Prevention Engineer that the design of the project meets all appropriate listed criteria.

6.6 **SIXTY PERCENT SUBMITTAL REQUIREMENTS**.

6.6.1 Sixty Percent Design Analysis. This shall be an updated version of the Concept/Early Preliminary Design Analysis incorporating review comments and design changes.

6.6.2 Sixty Percent Fire Prevention/Life Safety Drawing(s). This shall be an updated version of the Concept/Early Preliminary Fire Prevention/Life safety Drawing(s) incorporating review comments and design changes.

6.6.3 Sixty Percent Fire Prevention Engineer Certification. This submittal shall include written certification by the A-E's Fire Prevention Engineer that the design of the project meets all appropriate listed criteria.

6.7 **PRELIMINARY DESIGN SUBMITTAL REQUIREMENTS (FORMAL 60% SUBMITTAL)**.

6.7.1 Preliminary (60 Percent) Design Analysis. This shall be an updated version of the Concept/Early Preliminary Design Analysis incorporating review comments and design changes.

6.7.2 Preliminary (60 Percent) Fire Prevention/Life Safety Drawing(s). This shall be an updated version of the Concept/Early Preliminary Fire Prevention/Life safety Drawing(s) incorporating review comments and design changes.

6.7.3 Preliminary (60 Percent) Fire Prevention Engineer Certification. This submittal shall include written certification by the A-E's Fire Prevention Engineer that the design of the project meets all appropriate listed criteria.

6.8 **FINAL (100 PERCENT) DESIGN SUBMITTAL REQUIREMENTS**.

6.8.1 Final Design Analysis. The final Fire Protection design analysis shall be developed from the design analysis submitted with the concept submittal. It shall be an updated version, not an amendment to earlier work. It shall incorporate all Fire Protection requirements, calculations, analyses, determinations, etc. required by all technical sections and chapters of this handbook and shall accurately reflect the final project design. The submittal shall be logically separated into subsections relating to the various technical disciplines involved.

6.8.2 Final Fire Prevention/Life Safety Drawing(s). This drawing(s) shall be complete and shall accurately reflect the final design features.

6.8.3 Final Fire Prevention Engineer Certification. The A-E's Fire Prevention Engineer shall certify the final design in written form. This is a separate certification from that required at the Concept submittal. The certification shall be included in the Fire Protection Design Analysis package.

6.8.4 Final Specifications.

6.8.4.1 Typed project specifications with electronic copy shall be submitted in accordance with Chapter A-11, SPECIFICATIONS.

6.8.4.2 Specifications will not be restrictive. Generally, the description will be such that at least three manufacturers can meet the specified requirements. Do not use trade names in the specifications.

6.8.4.3 Specifications for fire suppression systems shall be CEGS adapted for the project. Components such as smoke detectors, heat actuated devices, and control panels for a Halon system shall be specified in the Fire Suppression specifications.

6.8.4.4 The subparagraphs on "Electrical Work" shall be carefully coordinated with the electrical section of the specifications. There shall be no conflicts as to which section covers starters, controls, or wiring, and no conflicts as to the type of starters required for the individual items of equipment.

6.9 **CORRECTED FINAL DESIGN SUBMITTAL REQUIREMENTS**.

6.9.1 Notice. Corrected Final submittals are not considered a normal design level, and are required only when Final submittals must be revised or corrected due to error or omission.

6.9.2 Compliance. Comments affecting Fire Protection, generated during the Final Design review, shall be incorporated into the design analysis and drawing(s) in the Corrected Final submittal. Recertification by the Fire Prevention Engineer shall be required.

6.10 **REQUIREMENTS FOR DESIGN/BUILD RFP PACKAGES.** To be provided with specific instructions for the contract or delivery order.

*** End of Section ***

EXHIBITS

There are no exhibits for this chapter.

CHAPTER A-7

ENERGY ANALYSES, ECONOMIC ANALYSES, CONTROL SYSTEMS, EMCS

INDEX

7.1 GENERAL
- 7.1.1 Analyses
- 7.1.2 Site Adaptations
- 7.1.3 Changes During Design

7.2 APPLICABLE PUBLICATIONS
- 7.2.1 Air Force
- 7.2.2 Army Projects
- 7.2.3 All Projects

7.3 PRECONCEPT SUBMITTAL REQUIREMENTS
- 7.3.1 HVAC Alternatives Coordination
- 7.3.2 Modeling Input Data

7.4 CODE 3 DESIGN REQUIREMENTS

7.5 CONCEPT/EARLY PRELIMINARY (35 PERCENT) DESIGN SUBMITTAL REQUIREMENTS

7.6 PRELIMINARY (60 PERCENT) DESIGN SUBMITTAL REQUIREMENTS

7.7 FINAL (100 PERCENT) DESIGN SUBMITTAL REQUIREMENTS

7.8 CORRECTED FINAL DESIGN SUBMITTAL REQUIREMENTS

7.9 REQUIREMENTS FOR DESIGN/BUILD RFP PACKAGES

7.10 TECHNICAL REQUIREMENTS
- 7.10.1 Life Cycle Cost Analyses
- 7.10.2 U-Values
- 7.10.3 Energy Use Budget Compliance Check
- 7.10.4 Solar Energy
- 7.10.5 Energy Conservation
- 7.10.6 Nonsolar Energy Systems
- 7.10.7 Major Renovation
- 7.10.8 Energy Conservation Investment Program (ECIP)
- 7.10.9 Energy Engineering Analysis Program (EEAP)
- 7.10.10 HVAC Controls
- 7.10.11 Energy Monitoring and Control Systems (EMCS)

7.11 GLOSSARY OF TERMS AND ABBREVIATIONS

7.12 REFERENCES

EXHIBITS

CHAPTER A-7

ENERGY ANALYSES, ECONOMIC ANALYSES, CONTROL SYSTEMS, EMCS

7.1 **GENERAL**. As stated by Public Law 100-615, it is United States policy that the Federal Government has the opportunity and responsibility to develop, demonstrate, and promote energy conservation, solar heating, solar cooling, and renewable energy sources in Federal buildings.

7.1.1 Analyses. Terminology, acronyms, abbreviations, and symbology shall be defined. Document all calculations, data, methods, and conclusions. Technical analyses shall be performed using approved methods.

7.1.2 Site Adaptations. Requirements given in this chapter apply equally to new designs, major renovations and adaptations of previous designs. Designers may have to modify previous designs in order to bring the design into accord with current criteria. All pertinent analyses must be submitted for adaptations of previous designs unless specifically exempted by the Government. Previous design analyses for solar applications, energy budget (EB), conservation methods, life cycle cost analysis, (LCCA) and energy system simulations may be submitted, in lieu of a new analysis, for cases where the following conditions are fully satisfied.

a. The Designer reviews and verifies the previous analysis.
b. Climate, siting and orientation must be equivalent.
c. Design factors impacting analyses must be equivalent.
d. Alternatives being studied must be equivalent.
e. Previous analysis methods meet current requirements.

7.1.3 Changes During Design. All significant changes and their impacts shall have applicable analyses (EB, LCCA) revised and resubmitted, regardless of when or how the change occurs during the project. Note well that changes may necessitate revised economic and Engineering analyses.

7.2 **APPLICABLE PUBLICATIONS**. The most current editions of the publications listed below constitute an addendum to this chapter.

7.2.1 Air Force. The following are applicable only to Air Force projects.

AF ETL 94-4 Energy Usage Criteria for Facilities in the Military Construction Program

MIL-HDBK 1190 Facility Planning and Design Guide

7.2.2 Army Projects. The following are applicable only to Army projects.

TI 800-01 Technical Instructions, Design Criteria

7.2.3 All Projects. The following apply for all Military construction.

CEGS-13814 Building Preparation for Energy Monitoring and Control Systems (EMCS)

CEGS-15950 HVAC Control Systems

CEGS-15951 Direct Digital Control for HVAC

AF ETL 83-1 Design of HVAC Control Systems

HNDSP-83-049-ED-ME EMCS Cost Estimating Guidelines

NBS Handbook 135LCC Manual - Federal Energy Program

TM 5-785 Engineering Weather Data

TM 5-802-1 Economic Studies for Military Construction Design - Applications

TM 5-810-1 Mechanical Design Heating, Ventilating, and Air Conditioning

TM 5-815-2/AFM 88-36 Energy Monitoring and Control System (EMCS)

TI 810-11 Heating, Ventilating, and Air Conditioning (HVAC) Control Systems

7.3 **PRECONCEPT SUBMITTAL REQUIREMENTS**. Unless otherwise stated, the following items shall be submitted prior to the Concept Design Submittal.

7.3.1 HVAC Alternatives Coordination. Before commencing analysis of HVAC systems, contact CESASEN-DM for approval of selected alternatives. Submit written confirmation of approvals documenting alternatives considered, persons contacted, basis of alternatives chosen, alternatives approved, and date.

7.3.2 Modeling Input Data. Preconcept submittal of modeling data is only required when called for in the design instructions. When required, submit the following items to CESASEN-DM for review prior to computer modeling runs.

a. Two copies of all modeling input data.

b. Single line rough layout sketches (8½ inches x 11 inches - Not to Scale), for each alternative, in sufficient detail to show zoning, approximate pipe and such lengths, and quantities for major components.

7.4 **CODE 3 DESIGN REQUIREMENTS.** To be furnished with specific instructions to contract or delivery order.

7.5 **CONCEPT/EARLY PRELIMINARY (35 PERCENT) DESIGN SUBMITTAL REQUIREMENTS**. Unless otherwise specified, the following items shall be submitted at Concept. See paragraph 7.8, TECHNICAL REQUIREMENTS for instructions on methods and content.

a. Printouts of I/O data for DEU and LCC simulations.
b. U-value calculations for exterior surfaces.
c. DEU breakdown for each building.
d. Life Cycle Cost Analysis, including approval of alternatives which are to be studied.
e. Energy conservation methods report.
f. List of specs to be used.
g. I/O data diskette (when required).

7.6 **PRELIMINARY (60 PERCENT) DESIGN SUBMITTAL REQUIREMENTS**. No submittal required.

7.7 **FINAL (100 PERCENT) DESIGN SUBMITTAL REQUIREMENTS**. The following items shall be submitted for review. See paragraph 7.8, TECHNICAL REQUIREMENTS for instructions on methods and content.

a. HVAC controls drawings (shown on C-plates) and specs.
b. Final EMCS plans and specs (when required).
c. Annotated responses to all review comments.
d. Revised design energy usage calcs and report for any significant changes.

7.8 **CORRECTED FINAL DESIGN SUBMITTAL REQUIREMENTS**. The following items shall be submitted for review.

a. HVAC controls drawings and specs with final comments incorporated.
b. Annotated responses to all review comments.

7.9 **REQUIREMENTS FOR DESIGN/BUILD RFP PACKAGES.** To be furnished with specific instructions to the contract or delivery order.

7.10 **TECHNICAL REQUIREMENTS**. This section prescribes detailed procedures, acceptable methods and minimum content requirements for studies, analyses, and designs. Unless otherwise specified, all applicable studies shall be required for all new building design projects, major additions to existing buildings, and major renovations of existing buildings or energy systems.

7.10.1 Life Cycle Cost Analyses. Unless otherwise authorized, constant dollar methods given in TM 5-802-1 and NBS Handbook 135 shall be used. Analyses shall be based on actual expected operating conditions, energy usage and costs. Selections of major systems and equipment must be supported by economic analyses except in the following situations. Major systems include all HVAC systems unless stated otherwise.

a. There are no reasonable alternatives for comparison.

b. A waiver has been approved exempting the requirement.
c. The cost of the analysis is greater than any potential benefit.

7.10.1.1 Cost Estimates. Economic analyses must include cost estimates.

7.10.1.2 Computer Analyses. Computerized analyses shall be made using the program LCCID available from CERL. Programs other than LCCID must be certified by HQUSACE CEMP-E as the equivalent thereof. Before using any computer program, make sure that it is updated with the most current discount factors published in the periodic supplement to NBS Handbook 135.

7.10.1.3 Site Energy Costs. When purchased energy is used, analyses shall be based on site energy usage and the actual cost of energy at the site. Purchased energy is energy for which the site is billed at a rate which includes all applicable costs (e.g. fuel costs, operating costs, generating losses, distribution losses, profit, taxes).

7.10.1.4 Source Energy Costs. When generated energy is used, analyses should be based on the systems source fuel input, fuel costs, and efficiencies. Generated energy is energy for which the Government operates or controls the generation and distribution system.

7.10.1.5 Rules. The overriding factor in selections shall be the mission function of the Customer. Alternatives must meet the functional requirements. Selections between alternatives shall be for systems with the lowest Total LCC and a design energy usage no greater than the Energy Use Budget. In the case of alternatives with equivalent LCC see chapter 2, para 2.2 of TM 5-802-1.

7.10.2 U-Values. Exterior surfaces of thermally controlled spaces shall be in accordance with the following criteria.

Army	TI 800-01 Technical Instructions, Design Criteria
Army Medical	MIL-HDBK-1191, DOD Medical and Dental Treatment Facilities Design and Construction Criteria
Air Force	AF ETL 94-4, Energy Usage Criteria for Facilities in the Military Construction Program

Submit U-value calculations for exterior surfaces of conditioned buildings to include typical walls, floor, roof, and gross (weighted average) walls.

7.10.3 Energy Use Budget (EUB) Compliance Check. The building's design energy usage (DEU) shall be submitted for each new building and each building with major renovation involving energy systems or exterior surfaces. The DEU shall be based on all loads except process loads. Hours of operation shall be the standard schedules given in the following sources. For hours outside the hours of operation, area lights and HVAC equipment shall be scheduled "off." It shall be verified that the DEU is within the EUB.

Army	TI 800-01 Technical Instructions, Design Criteria.

Air Force ETL 94-4, Energy Usage Criteria for Facilities in the Military Construction Program

7.10.3.1 Energy Use Budget (EUB). Energy use budgets given in the following sources are the maximum allowable standardized energy usage rates. However, it is intended that designers use good judgement, standard practice and specified criteria to optimize energy systems based on lowest LCC.

Army TI 800-01 Technical Instructions, Design Criteria

Air Force ETL 94-4, Energy Usage Criteria for Facilities in the Military Construction Program

7.10.3.2 Conversion Factors. Energy use or savings shall be calculated using the following factors. These conversion factors are given by 10 CFR, Part 436. Equipment efficiencies and system losses must be accounted for in calculations. For energy media not listed here, use current standard Engineering data or other approved reference data.

ENERGY MEDIUM FACTORS	CONVERSION FACTORS	METRIC CONVERSION FACTORS
Electricity - Purchased	3,413 Btu/kWh	3.6 million joules/kilowatt hour
Electricity - Generated	11,600 source Btu/site kWh	12.2 million joules (source)/KWH (site)
Steam - Purchased/Generated	1,000 Btu/lb	2.3 million joules/kilogram
Natural Gas	1,031 Btu/cf	38.4 million joules/liter
LPG, Propane, Butane	95,500 Btu/gal	26.6 million joules/liter
No. 2 Oil - Distillate	138,700 Btu/gal	38.7 million joules/liter
No. 5/6 Oil - Residual	149,700 Btu/gal	41.7 million joules/liter
Coal - Bituminous	24.6 million Btu/short ton	28.6 million joules/kilogram
Coal - Anthracite	28.4 million Btu/short ton	33 million joules/kilogram
Water - other than steam	use energy value at site boundary	

7.10.3.3 Site/Source. DEU shall be based on site energy usage, except as stated below. Site energy usage is defined as usage occurring within an imaginary 5-foot boundary line around the building.

a. Energy crossing the boundary shall be measured or accounted for at the boundary with proper credit given for usable returned energy (steam, chilled water, high temp water, etc.).

b. When equipment or systems located outside the boundary (e.g. chillers, condensers, transformers, central plants, cooling towers) serve less than five buildings, prorate their energy usage among the buildings served and include it in EB2 and EB3 as appropriate.

c. Distribution losses beyond the boundary shall not be included in the EB, excepting that such losses from equipment or systems serving less than five buildings shall be prorated among the buildings served and included in the EB.

7.10.3.4 Gross Area. The DEU shall be based on building gross area. Gross area is defined as the sum of all floor areas including basements, cellars, mezzanines, other intermediate floor tiers and penthouses. All measurements shall be from the exterior wall of the building or from the center line of party walls.

7.10.3.5 Hot Water (HW). For DEU, compute nonprocess HW usage as follows.

$$Q = N \times A \times D \times (To - Ti) \times 8.33$$

Q = HW energy usage in Btu
N = Number of people served daily
A = Gallons per person **
D = Days of HW consumption
To = Outlet Water Temp (F)*
Ti = Inlet Water Temp (F)

****
*
THE FOLLOWING IS THE SAME FORMULA IN S.I. METRIC UNITS
****
*

$$Q = N \times A \times D \times (To - Ti) \times 9.24 \quad \text{Metric Units}$$

Q = HW energy usage in Watts/h
N = Number of people served daily
A = Liters per person **
D = Days of HW consumption
To = Outlet Water Temp (C)*
Ti = Inlet Water Temp (C)

* See ASHRAE 1991 Handbook, HVAC Applications, Chapter 44, Table 3
** See ASHRAE 1991 Handbook, HVAC Applications, Chapter 44, Table 7

7.10.3.6 Process Energy. The items listed below are considered processes. People are not process loads and should be included in the analysis. HVAC required in direct support of a process is considered part of the process. Interior lighting is not considered a process.

a. All nonreal property.
b. Installed equipment (e.g. refrigerated merchandise cases).
c. User equipment (e.g. typewriter, copier, computer).
d. Industrial equipment.
e. Training systems.
f. Hot water for gyms, cafeterias, and commissaries.
g. Specialized ventilation systems required by OSHA.
h. Exterior perimeter lighting.

7.10.4 Solar Energy. Public Law requires that designers consider solar feasibility and include cost effective applications in new construction and major renovations of Federal Buildings.

7.10.4.1 Active Solar. According to the Generic Active Solar Feasibility Study for CONUS, active solar hot water heating systems are not feasible for DOE region 3, which includes Georgia, South Carolina and North Carolina.

7.10.5 Energy Conservation. It is the policy of the Federal Government to develop, demonstrate, and promote the use of energy conservation methods in Public buildings. The designer shall incorporate energy conservation features where possible. Listed below are general examples of conservation methods. This list is not all inclusive and is not intended to limit ingenuity.

a. Energy recovery.
b. Loading dock seals.
c. Air destratification.
d. Minimal HVAC of stairwells.
e. Point of use, on demand type water heaters.
f. Integrated AC-lighting system (return air troffer).
g. Optimized thermal envelopes (e.g. ducts, pipes, equipment).
h. Economizer cycles (except for Hunter AAF, Ft. Stewart and Moody AFB).

7.10.5.1 Energy Conservation Reports. For conservation methods with an investment cost exceeding 1.00 percent of the PA, a report shall be submitted with supporting economic analyses. The report shall list the conservation features to be included in the project. The report shall include the following.

a. Title of conservation method.
b. Investment cost.
c. Net energy savings.
d. Net LCC savings (only for items exceeding 1.00 percent).
e. Simple payback (only for items exceeding 1.00 percent).
f. SIR (only for items exceeding 1.00 percent of PA).
g. Evaluation method.
h. All pertinent backup data.

7.10.6 Nonsolar Energy Systems. A minimum of three alternatives shall be studied for each significant energy using system and subsystem. Significant energy usage includes:

a. Any annual energy cost exceeding $15,000.
b. Any usage which exceeds 25 percent of the energy target.
c. All HVAC systems are considered significant energy users.

7.10.6.1 Systems Other Than HVAC. Study requirements for systems other than HVAC will be issued upon request through Project Managers.

7.10.6.2 HVAC Systems. All HVAC systems are considered significant energy users until proven otherwise. Study of HVAC system alternatives is required. Alternatives must be coordinated with and approved by CESASEN-DM.

7.10.6.3 HVAC System Analysis. Any Army facility that is heated and/or cooled or heated only and exceeds 280 ^{m2} (3,000 ft^2) of gross floor area will be analyzed with a computer program that uses established weather data files and performs 8,760 hourly calculations. Energy calculations for buildings that do not require a computer simulation may use a computer program or appropriate methods explained in the 1989 ASHRAE Fundamentals Handbook, Chapter 28. When typical buildings are analyzed and the results applied to similar facilities, the building area used in selecting appropriate methods shall be the total gross area of all similar buildings and the typical building combined. Printouts of pertinent I/O data must be submitted as backup for DEU and LCC runs. Unless BLAST is used, an IBM DOS or MS DOS compatible diskette containing the I/O data must also be submitted.

7.10.7 Major Renovation. Major renovation is defined as changes in the features of the building envelope and replacement of the lighting, HVAC and water heating systems. When instructions for projects state that the project involves major renovation Energy Budget, Active Solar, and Life Cycle Cost analyses will be required.

7.10.8 Energy Conservation Investment Program (ECIP). This article's instructions only apply to projects designated as ECIP funded. Validations and revalidations shall be done as specified in the Energy Conservation Investment Program (ECIP) guidance. If revalidation shows a project or a portion of a project does not meet current ECIP criteria, then designers must provide a full explanation of the reasons including discussion of significant differences between the original validation and the revalidation. All other pertinent requirements given in this chapter apply to ECIP projects, unless stated otherwise by specific instructions.

7.10.9 Energy Engineering Analysis Program (EEAP). Scope of work requirements for EEAP studies are provided on a case by case basis. No other requirements given in this chapter apply to EEAP studies unless specifically so stated in the EEAP Scope of Work.

7.10.10 HVAC Controls. HVAC control system designs shall be in accordance with the guidance presented in TI 810-11. Designs for HVAC control systems shall be for electronic controls, not to include DDC unless designated in the individual project specific instructions. Pneumatic actuators are acceptable but pneumatic controls are not allowed without specific approval.

7.10.10.1 Drawings.

7.10.10.1.1 Single Loop Digital Control (SLDC) Drawings. Savannah District has produced detailed control drawings for air handling systems which shall be used without modification for any reason other than a site specific condition. These drawings are available in CADD form and are located on the SAS_STD CD as well as the WES CADD Library web site. The CADD formats available are limited to Intergraph and Autocad. Detail designs will be required for system for which drawings are not available. The HVAC control plates (MC-plates) include:

a. Schematics.
b. Ladder diagrams.

c. Equipment schedule (updated with job specific data).
d. Control panel details.

7.10.10.1.2 Direct Digital Control (DDC) Drawings. Savannah District has produced detailed control drawings for air handling systems which shall be used without modification for any reason other than a site specific condition. These drawings are available in CADD form and are located on the SAS_Std CD as well as the WES CADD Library web site. The CADD formats available are limited to Intergraph and AutoCAD. Detail designs will be required for system for which drawings are not available. The HVAC control plates (MC-plates) include:

a. Schematics.
b. Ladder diagrams.
c. Data terminal strip.
d. I/O summary table.
e. Equipment schedule (updated with job specific data).
f. Sequence of operation.

DDC controls shall only be used when specifically called for in the individual project specific instructions.

7.10.10.2 Specifications.

Internet address for CEGS specifications http://www.hnd.usace.army.mil/techinfo/

7.10.10.3 Control Panel Locations. Reserve clear wall and floor space for each HVAC control panel. Verify clearances required for adequate maintenance access are satisfied.

7.10.11 Energy Monitoring and Control Systems (EMCS). New building designs and major renovations of buildings, HVAC systems, or HVAC controls shall include provisions for EMCS. Exceptions may be made for certain small, remote buildings. All exceptions must be approved by CESASEN-DM. Army TM 5-815-2 shall be used for guidance. EMCS cost estimates shall be in accordance with HNDSP-83-049-ED-ME.

a. Drawings. Plans will include the following.

1. I/O summaries (address points) and hardware.
2. Data terminal cabinet (DTC).
3. Space allocation adjacent to the DTC for an FCL.
4. 110-volt duplex wall outlet adjacent to FCL.
5. Conduit and wiring from DTC to each utility meter.
6. Utility Meters - Gas meters shall be of the pulsing type or of the type which can be adapted to a future EMCS by the addition of a pulsing device. Refer to CHAPTER A-5 for electric meters.
7. Future Cabinet Locations (FCL). In mechanical rooms reserve clear wall space 3 ft wide with enough clearance (see NEC Article 110) for an 457 mm (18-inch) deep EMCS cabinet to be placed in the future.

b. Specifications. Prepare specs using CEGS 13814 BUILDING PREPARATION FOR ENERGY MONITORING AND CONTROL SYSTEMS (EMCS) or incorporate applicable portions of 13814 into section CEGS 15950 HEATING, VENTILATING, AND AIR CONDITIONING (HVAC) CONTROL SYSTEMS.

c. Failure Logic. Design controls such that in an EMCS failure local loop control function either continues or fails to the desired mode.

7.11 **GLOSSARY OF TERMS AND ABBREVIATIONS**.

AABC	American Air Balance Council
AC	Air Conditioning (or cooling)
AFF	Above finished floor
ANSI	American National Standards Institute
ASHRAE	American Society of Heating, Refrigeration and AC Engineers
ASME	American Society of Mechanical Engineers
BLAST	Building Loads Analysis and System Thermodynamics
Btu	British thermal unit
C	Celsius
CDD	Cooling Degree Day method
CEGS	Corps of Engineers Guide Specifications
CERL	Construction Engineering Research Laboratory
cf	cubic feet
CFR	Code of Federal Regulations
CWE	Current work estimate
DDC	Direct Digital Control
DoD	Department of Defense
DoE	Department of Energy
DOS	Disk Operating System (e.g. IBM or Microsoft)
EB	Energy Budget
EMCS	Energy Monitoring and Control System
ETL	Engineering Technical Letter
F	Fahrenheit
FCL	Future Cabinet Location (EMCS)
FID	Field Interface Device
g	gram
h	hour
HDD	Heating Degree Day method
hp	horsepower
HVAC	Heating, Ventilating, and/or Air Conditioning
I/O	Input/Output
J	Joule
k	kilo = 1,000
LCC	Life Cycle Cost
LCCID	Life Cycle Cost In Design (by CERL)
m	meter
M	Mega = 1,000,000
MILCON	Military Construction

Mux	Multiplexer
NBS	National Bureau of Standards
NCEL	Naval Construction Engineering Laboratory
NEBB	National Environment Balancing Bureau
NEC	National Electrical Code
NTIS	National Technical Information Service
SIR	Savings Investment Ratio
SPW	Single Present Worth
UPW	Uniform Present Worth
UPW*	Modified UPW

7.12 **REFERENCES**. The following were used as guidance in preparing this chapter. Unless otherwise specified, they do not constitute an addendum.

TI	Design Criteria
AF ETL 84-7	MPC Energy Conservation Investment Program
AF ETL 86-2	Energy Management and Control Systems
TM 5-802-1	Economic Studies for Military Construction Design - Applications
Army Reg 11-27	Army Energy Program
Army Reg 11-28	Economic Analysis
Public Law 100-615	Federal Energy Management Improvement Act of 1988
10 CFR, Part 436	Energy

CHAPTER A-7

ENERGY ANALYSES, ECONOMIC ANALYSES, CONTROL SYSTEMS, EMCS

EXHIBITS

A-7-1 GENERAL CHECKLIST FOR ENERGY ANALYSIS

A-7-2 DESIGN ENERGY USAGE SUMMARY

GENERAL CHECKLIST FOR ENERGY ANALYSIS

PROJECT: _____
SITE: _____
LI: _____
FY: _____
CN: _____
DESIGNER: _____
CHECKER: _____
DATE: _____

A. PRECONCEPT PHASE.

_____ If previous designs are being site adapted, then previous analyses must be verified as acceptable for submission or new analyses must be made. In any case a complete design analysis must be made for all projects.

_____ Coordinate energy system alternatives before beginning detailed studies.

_____ When required submit modeling data prior to modeling runs.

B. CONCEPT DESIGN PHASE.

_____ Are U-value calc provided and are any deviations from criteria justified based on a LCCA?

_____ Are Energy Budgets complete and submitted for each unique building?

_____ Are Active Solar Analyses complete and submitted for each building?

_____ Have all energy modeling I/O data been submitted?

_____ Have all analyses been checked for accuracy and completeness?

C. PRELIMINARY DESIGN PHASE.

_____ Have any significant changes occurred since Concept? If yes, then have all applicable analyses been revised and resubmitted?

_____ Have all technical comments been resolved satisfactorily?
_____ Have any Value Engineering proposals been incorporated into the design? If yes, then have all applicable analyses been revised and resubmitted?

D. FINAL DESIGN PHASE.

_____ Have any significant changes occurred since Concept? If yes, then have all applicable analyses been revised and resubmitted?

_____ Have all technical comments been resolved satisfactorily?

_____ Have any Value Engineering proposals been incorporated into the design? If yes, then have all applicable analyses been revised and resubmitted?

_____ Are U-values listed in the architectural specs in accordance with analyses?

_____ Are control plans and specs complete?

_____ Are EMCS plans and specs complete?

_____ Is the final design analysis complete?

_____ Have all listed submittal items been submitted?

DESIGN ENERGY USAGE SUMMARY

PROJECT: _____

BASE: _____

LI: _____ FY: _____

Exhibit A-7-2

Exhibit A-7-2

DOE REGION: _____ BUILDING: _____

CATEGORY CODE/FACILITY TYPE: _____

APPROXIMATE GROSS FLOOR AREA: _____
FLOOR AREA (heated and cooled): _____
FLOOR AREA (heated only): _____

HVAC SYSTEM DESCRIPTION: Describe all systems and energy sources

ENERGY USE BUDGET: _____ Btu/sf/yr

STANDARD SCHEDULE: _____

DESIGN ENERGY USAGE: _____ Btu/sf/yr

Heating _____ Btu/sf/yr
Cooling _____ Btu/sf/yr
Lighting _____ Btu/sf/yr
Ventilation _____ Btu/sf/yr
Domestic HW _____ Btu/sf/yr

PERCENT DEVIATION FROM GOAL: _____

EXPLANATION FOR DEVIATING FROM ENERGY GOAL:

CHAPTER A-8

ENVIRONMENTAL ENGINEERING

INDEX

8.1 GENERAL
- 8.1.1 Water Supply Systems
- 8.1.2 Wastewater Systems

8.2 APPLICABLE PUBLICATIONS
- 8.2.1 Air Force Basic References
- 8.2.2 Water Supply Treatment, Storage and Distribution Systems
- 8.2.3 Water Supply, Storage and Pumping for Fire Protection
- 8.2.4 Wastewater Collection and Treatment Systems
- 8.2.5 Guide Specifications

8.3 CODE 3 DESIGN REQUIREMENTS

8.4 CONCEPT (35 PERCENT) SUBMITTAL REQUIREMENTS
- 8.4.1 Studies
- 8.4.2 Study Plan Submittal

8.5 CONCEPT DESIGN DRAWINGS
- 8.5.1 Exterior Utility Layouts
- 8.5.2 Other Requirements

8.6 PRELIMINARY (60 PERCENT) SUBMITTAL REQUIREMENTS

8.7 PRELIMINARY (60 PERCENT) DESIGN SUBMITTAL REQUIREMENTS
- 8.7.1 Design Analysis
- 8.7.2 Design Drawings

8.8 FINAL (100 PERCENT) SUBMITTAL REQUIREMENTS
- 8.8.1 Final Design Analysis
- 8.8.2 Final Design Drawings
- 8.8.3 Specifications

8.9 CORRECTED FINAL DESIGN SUBMITTAL REQUIREMENTS

8.10 REQUIREMENTS FOR DESIGN/BUILD RFP PACKAGES

8.11 TECHNICAL REQUIREMENTS
- 8.11.1 Permits
- 8.11.2 Standard Systems Criteria

8.12 SUPPLEMENTAL TECHNICAL REQUIREMENTS
8.12.1 Water Supply
8.12.2 Wastewater Treatment and Disposal

EXHIBITS

CHAPTER A-8

ENVIRONMENTAL ENGINEERING

This chapter presents general requirements for the preparation of plans, specifications, and design analysis for water supply and wastewater treatment systems.

8.1 **GENERAL**.

8.1.1 Water Supply Systems. Water supply systems include sources, pumping, treatment, storage, and distribution of water used for domestic, industrial, irrigation, and fire protection.

8.1.2 Wastewater Systems. Wastewater systems include collection, pumping, treatment, and disposal of domestic and industrial wastes.

8.2 **APPLICABLE PUBLICATIONS**.

8.2.1 Air Force Basic References.

Air Force	AFM 88-15 Air Force Manual - Criteria and Standards for Air Force Construction (Chapter 15)

8.2.2 Water Supply Treatment, Storage and Distribution Systems. (Army/Air Force)

TI 814-01	Water Supply
TI 814-03	Water Distribution
TL 1110-3-367	Trace Organic Compounds in Potable Water Supplies
TL 1110-3-465	Design and Construction of Water Meters and Appurtenances/New Army Facilities
TM 5-809-10/AFM 32-1070, Chap. 13	Seismic Design for Buildings
TM 5-810-5/AFM 88-10, Chap. 4	Plumbing
TM 5-813-1/AFM 88-10, Vol. 1	Water Supply Sources and General Considerations
TM 5-813-3/AFM 88-10, Vol. 3	Water Supply Water Treatment
TM 5-813-4/AFM 88-10, Vol. 4	Water Supply Water Storage
TM 5-813-5/AFM 88-10. Vol. 5	Water Supply, Water Distribution

Recommended Standards for WATER WORKS (Ten States' Standards) (Latest Edition)

8.2.3 Water Supply, Storage and Pumping for Fire Protection. (Army/Air Force)

ER 1110-1-260	Fire Protection Engineering Policy
MIL-HDBK-1008C	Fire Protection for Facilities Engineering, Design, and Construction
NFPA 22	Water Tanks for Private Fire Protection
TM 5-813-7/AFM 88-10, Vol. 7	Water Supply for Special Projects
TM 5-813-9	Water Supply Plumbing Stations
NFPA 20	Installation of Centrifugal Fire Pumps
NFPA 24	Installation of Private Fire Service Mains

8.2.4 Wastewater Collection and Treatment Systems. (Army/Air Force)

MIL-HDBK-1005/16	Wastewater Treatment System Design Augmenting Handbook
TI 814-10	Wastewater Collection
TI 814-21	Solid Waste Incinerator
TL 1110-3-477	Alternative Sludge Dewatering Techniques for Wastewater Treatment Facilities
TM 5-814-1/AFM 88-11, Vol. 1	Sanitary and Industrial Wastewater Collection - Gravity Sewers and Appurtenances
TM 5-814-2/AFM 88-11, Vol. 2	Sanitary and Industrial Wastewater Collection Pumping Stations and Force Mains
TM 5-814-5	Sanitary Landfill
TM 5-814-7	Hazardous Waste Land Disposal/Land Treatment Facilities
TM 5-814-8	Evaluation Criteria Guide for Water Pollution Prevention, Control, and Abatement Programs

Recommended Standards for Sewage Works (Ten States Standards) (Latest Edition)

Manual of Septic Tank Practice, U.S. Department of Health, Education, and Welfare

Applicable State Criteria

American Petroleum Institute (API Publication 421) Monographs on Refinery Environmental Control-Management of Waste Discharges

8.2.5 Guide Specifications. Internet address for CEGS specifications http://www.hnd.usace.army.mil/techinfo/

8.3 **CODE 3 DESIGN REQUIREMENTS.** To be furnished with specific instructions to the contract or delivery order.

8.4.3 **CONCEPT (35 PERCENT) SUBMITTAL REQUIREMENT**.

8.4.1 Studies. Certain projects may be of such magnitude or significance that in order to select the best possible design the COE may require a study to be made prior to concept submittal. Where a 10 percent submittal is specifically called for, the A-E shall submit the project site plan with the building outline with supporting utilities.

8.4.2 Study Plan Submittal. The plan shall show the design approach in sufficient detail so that an evaluation by SAS, SAD and using agency together with the A-E may arrive at the most feasible scheme to prepare a concept package. This submittal shall be on full size drawing sheets printed at one-half size.

8.4.2.1 Building Service. The analysis for exterior building water service lines shall show flow, velocity and pressure drop between the water main and building, and pipe sizes. No design analysis of gravity house sewers will be required unless the sewage flow exceeds the capacity of a 6-inch [150 mm] pipe on a 0.6 percent slope. A design analysis is required for pneumatic ejectors, sewage pumps, sump pumps, and hydropneumatic systems.

8.4.2.2 Water Distribution Mains. If new water distribution mains are required, a Hardy Cross analysis may be required. This shall consist of a flow analysis of the proposed new mains using fire demands developed from criteria contained in MIL-HDBK-1008, Fire Protection for Facilities, and AFM 88-15 (Chapter 10) for Air Force projects. The flow around all loops shall be balanced by use of the Hardy Cross system of analysis or other approved means. In developed areas where the existing distribution mains appear adequate, indicate the required fire demand and verify the adequacy of the existing system by a fire-flow test at a nearby hydrant. Results of the fire-flow test shall be put on form, Exhibit A-8-1, as part of the design analysis. Frictional losses from test point to the site tie on should be included in the analysis. If the existing system is proved to be inadequate to supply the fire demand, augmentation of the system will be required. This will be documented even though it may not be part of the project. Requirements for fire-flow tests shall be forwarded through the Corp's Project Manager. Design of fire pumping stations shall be accomplished by individuals experienced in fire protection systems. The A-E shall determine for the concept design stage whether fire pump station/ground storage reservoirs are required for specific projects.

8.4.2.3 Sewage. Gravity sewage collection systems will be sized for concept design. The analysis shall show sewage flows, velocities, pipe sizes, elevations, and pipe capacities. Where new sewage collection systems are to be connected to the existing system, the existing sewage collection system will be checked downstream for five or more existing manholes to see if it is adequate for the added flow. New sewage flow will be added to the existing flow

to determine the impact of the increased flow. Design analysis shall be furnished for sewage lift stations and force mains showing flows, velocities, component capacities, head requirements, detention periods, etc. Analysis shall be prepared in conformance with TM 5-814-1/AMF 88-11, Vol.1, TM 5-814-2/AMF 88-11, Vol.1, and AFM 88-15 for Air Force projects. Design analysis will be required for septic tanks and tile fields. The A-E shall determine the feasibility of a septic tank and tile field where buildings are remotely located and it is uneconomical to make normal house connections into an existing main. Soil percolation tests will be conducted by the Corps of Engineers, or the state environmental office unless otherwise specified to be made by the A-E. Oil/water separators shall be designed in accordance with API criteria and be capable of removing free and effluent oil globules greater than 15 mg/L and provide no greater than 15 mg/L free oil concentration effluent.

8.5 **CONCEPT DESIGN DRAWINGS**.

8.5.1 Exterior Utility Layouts. Exterior utility layouts on the concept design shall be adequately detailed to show the various systems; and the design proposed shall include sufficient details to obtain adequate concept.

8.5.2 Other Requirements. Any information other than the requirements listed above which the designer considers necessary to show the intent of design.

8.6 **PRELIMINARY (OVER THE SHOULDER) SUBMITTAL REQUIREMENTS**. (See paragraph A-5, Volume 1 for submittal requirements).

8.7 **PRELIMINARY (60 PERCENT) DESIGN SUBMITTAL REQUIREMENTS**.

8.7.1 Design Analysis. The Preliminary design analysis shall include all items in the concept design analysis and any necessary revisions. In addition, the following specific items shall be included, when applicable:

8.7.1.1 Water Supply Sources.

8.7.1.1.1 Calculations indicating available supply and pressure versus required supply and pressure if revisions are required.

8.7.1.1.2 Calculations to support selection of all equipment and pipe sizes.

8.7.1.1.3 Outline specifications.

8.7.1.2 Domestic and Industrial Wastewater Treatment.

8.7.1.2.1 Average and peak loadings for individual unit processes including hydraulic gradient, biological and physical, etc.

8.7.1.2.2 Detailed descriptions of proposed unit processes including type, size, capacity, supporting data, and calculations showing the degree of treatment expected in each unit process, as well as the overall treatment efficiency.

8.7.1.2.3 Discussion of controls, instrumentations, and proposed operating sequences or methods.

8.7.1.2.4 Discussion of features for operator safety and comfort.

8.7.1.2.5 Discussion of facility layout from the standpoint of easy operation and maintenance.

8.7.1.2.6 Calculations to support selection of all equipment and pipe sizes.

8.7.1.2.7 Discussion of pollution control authority requirements and design compliance with authority requirements.

8.7.1.2.8 Outline specifications.

8.7.1.3 Water Distribution and Wastewater Collection Systems

8.7.1.3.1 Detailed hydraulic calculations for each system including the worst fire situation for the water distribution system.

8.7.1.3.2 Discussion of pipe materials and justification for the materials selected when different from the options listed in the guide specifications.

8.7.1.3.3 Outline specifications.

8.7.2 Design Drawings. The following specific items shall be submitted, when applicable.

8.7.2.1 Water Supply.

8.7.2.1.1 Detailed floor plans and sections of treatment plants and pumping stations with equipment layout, piping, and sufficient dimensions and elevations to physically locate all items of equipment, piping, etc.

8.7.2.1.2 Hydraulic profiles.

8.7.2.1.3 Pipe sizes and materials of construction.

8.7.2.2 Domestic and Industrial Water and Wastewater Treatment.

8.7.2.2.1 Hydraulic profiles.

8.7.2.2.2 Detailed floor plans and sections of structures with equipment layout, piping, and sufficient dimensions and elevations, physically locate all items of equipment, piping, etc.

8.7.2.2.3 Instrumentation and control schematics.

8.7.2.3 Water Distribution and Wastewater Collection Systems.

8.7.2.3.1 Location of valves, fire hydrants, manholes, pumping stations, laterals, meters, etc.

8.7.2.3.2 Sizes and materials of construction for new pipelines and manholes.

8.7.2.3.3 Partially completed profiles of gravity sewers, force mains, and water supply lines. Double lines are required for profile piping.

8.7.2.3.4 Invert and rim elevations for all manholes.

8.7.2.3.5 Details for connecting new lines to existing systems.

8.8 **FINAL (100 PERCENT) SUBMITTAL REQUIREMENTS**.

8.8.1 Final Design Analysis.

8.8.1.1 Final design analysis will be a refinement of concept and/or preliminary design analysis. The previous design analysis will be revised as required to reflect changes made during final design.

8.8.1.2 Design analysis will show applicable references for design assumptions not found in common reference manuals which were not listed during the previous design analysis.

8.8.1.3 Design analysis will reflect all comments from the District on the previous design analysis.

8.8.1.4 All pipe sizing computations will be included in the analysis. Piping analyses will show design flow, pipe size, friction factors, slopes, lengths, and elevations where applicable, flow quantity, and velocity in the various mains and branches. Where necessary, flow diagrams will be included in the analysis.

8.8.1.5 Determination of pump heads will be based on complete take-off friction losses and static heads. Systems head curves are required for all pumping systems.

8.8.2 Final Design Drawings.

8.8.2.1 Final plans will be a refinement and completion of concept of preliminary drawings. All comments from this office relating to preliminary or concept design shall be incorporated in the final drawings.

8.8.2.2 Where crowded conditions exist due to close proximity of other phases of the work, sufficient sections and elevations will be shown to indicate clearly the exact location of the particular item in relation to other items.

8.8.2.3 The number of elevations and details will be sufficient to allow construction and installation of the work without additional design work by the Contractor.

8.8.2.4 Where equipment connection details are shown, indicate all required valves, trim, gauges, and fittings required. Coordinate with specification requirements and make sure that

valves, fittings, etc., that are specified to be furnished with each piece of equipment are included in the detail.

8.8.2.5 Final plans shall show all pipe sizes. Catwalks, ladders, platform, access panels, and doors required for operation and maintenance of equipment, valves, and accessories will be detailed on the drawings.

8.8.2.6 Performance characteristics for all items of equipment will be placed in carefully prepared equipment schedules. Equipment characteristics specified in "Note" fashion, or in random locations on the drawings are not acceptable. Equipment characteristics selected shall not be restrictive to any one manufacturer but must be competitive among at least three major manufacturers. No manufacturer's trade names shall be shown on the drawings or in the specifications.

8.8.2.7 Electrical characteristics, classification of NEMA type, if applicable, and except in special cases, rotative speeds will be included in equipment schedules.

8.8.2.8 Location of equipment and piping shall be completely coordinated with other features of the project; architectural, plumbing, mechanical, structural, electrical, etc.

8.8.2.9 Sanitary and industrial waste sewer drawings will have complete profiles for the entire length of run. These profiles will indicate elevations, depth of bury, and interfering utilities which may be encountered.

8.8.2.10 Complete construction details of water and sanitary sewer utilities as well as layouts will be required on the final plans. A legend shall be provided on the drawings to clearly differentiate between existing and new construction. Existing construction is generally indicated by light symbols and new construction is indicated by heavy black symbols. Existing construction data such as pipe size, elevations, valve, and fire hydrant locations, etc. pertinent to new construction will be included on the drawings.

8.8.3 Specifications.

8.8.3.1 Specifications will not be restrictive. Generally, the description will be such that at least three major manufacturers can meet the specified requirements. Do not use trade names in the specifications unless sole source authorization is requested and granted.

8.8.3.2 The subparagraphs on "Electrical Work" shall be carefully coordinated with the electrical section of the specifications. There shall be no conflicts as to which section covers starters, controls, or cost estimates for all items such as lift stations, septic tanks, oil separators, etc. The top and invert elevations of all new and existing sanitary sewer lines and manholes shall be shown on the concept plans. The A-E will be furnished standard water and sanitary details which shall be incorporated in the specifications or on the drawings. The legend in Exhibit A-8-2 shall be used in differentiating between new and existing work.

8.9 **CORRECTED FINAL DESIGN SUBMITTAL REQUIREMENTS**. All final design drawings and specifications shall have incorporated comments from the preceding reviews before the design is submitted as ready-to-advertise.

8.10 REQUIREMENTS FOR DESIGN/BUILD RFP PACKAGES. To be furnished with specific instructions to the contract or delivery order.

8.11 **TECHNICAL REQUIREMENTS**.

8.11.1 Permits.

8.11.1.1 Construction of new facilities and major extensions to existing water and wastewater systems must comply with the procedural requirements of the applicable state agency having approval authority. In most cases this is the Public Health Department for water supply and onsite wastewater treatment systems. Each state also has a department for pollution control projects involving point discharges. For this reason all designs of water and wastewater systems shall be coordinated with the appropriate agency at all stages of design. For all states review and approval of the final plans and specifications constitutes approval for construction.

8.11.1.2 The designer is required to contact the appropriate state pollution control agency and verify the procedure to follow to obtain a construction permit. In addition, where formal documents are required to be submitted, the designer will prepare all permits to a "ready for signature" condition. After review by the COE, the documents will be forwarded by the designer to the the state's EPD. Permit requirements should be ascertained by the designer at the time of the concept submittal. In South Carolina the designer shall be required to certify that the utilities have been installed in accordance with the permit.

8.11.2 Standard Systems Criteria.

8.11.2.1 Building Services:

8.11.2.1.1 Water Service Connections. The designer shall provide exterior water service connections to all new buildings from existing and/or new water distribution systems. Size building water service connections to meet the peak building demands as indicated in TM 5-810-5 (or AFM 32-1070, Section D for Air Force projects). Pressure drop between street mains and buildings shall not exceed 10 psi/100 feet [2.26 kPa/m] at these rates of flow. Provide valve or curb stop with box near connection to main.

8.11.2.1.2 Building Sewers (Sanitary). House sewers shall be of either the gravity type or the force main type as required by the building site conditions. Gravity type building sewers are preferable, if feasible, and they shall be constructed of 6-inch [150 mm] minimum size pipe on at least 0.6 percent slope. Where gravity sewage connections to street collection mains cannot be provided, provide pneumatic ejectors or sewage pumps in the building. The selection of pumps or ejectors shall be based on the economy of initial installation. No design analysis of gravity building sewers is required, but size and slopes of these lines must be shown on the plans. Duplex units shall be provided where ejectors or pumps are required. The capacity of each unit shall be sufficient to handle the peak rates of flow. Operation of the pumps shall be lead-lag for single as well as combined capability. Other design characteristics shall conform to TM 5-814-2, Sewage and Industrial Waste Pumping Stations.

8.11.2.2 Fire Protection:

8.11.2.2.1 Distribution Mains and Fire Hydrants. Provide distribution mains and fire hydrants, if not already existing in the building area, in accordance with the applicable portions of TM-5-813-1 and TM 5-813-5. The residual flow pressures at design flows shall not be less than 20 psi [138 kPa]. When practical water mains shall be installed parallel to streets and roads but not under roadway pavements if practical. The fire demand is determined by the sum of the fire flow, 50 percent of the average domestic demand rate, and any industrial demand that cannot be reduced during a fire period. See TM 5-813-1 or AFM 88-15 for Air Force projects. Provide fire hydrants in accordance with TM-5-813-5 and NFPA 24. Each building should be within 300 feet [90 m] of at least two hydrants. Fire hydrants will have gate valves on service lines.

8.11.2.2.2 Building Sprinkler Supply Mains. Sprinkler supply mains shall be at least the size required by the National Fire Protection Association. The adequacy of the existing or proposed distribution system and sprinkler lines to meet the sprinkler and hose stream demands as indicated in MIL-HDBK-1008C shall be determined by a fire-flow analysis or other approved means of analysis. Calculations shall show that the fire sprinkler demand flow and residual pressure can be provided by the available flow and residual pressure with the outside fire hydrant demand hydraulically subtracted out. If the available flow is greater than the required flow and residual pressure is greater than the design pressure then it is acceptable. If not, the existing distribution system shall be augmented to provide at least a 15-pound [7 m] residual pressure at the highest sprinkler heads in the building at design fire demands. Provide cutoff valves with boxes on the supply mains. These shall be located not less than 25 feet [8 m] nor more than 50 feet [15 m] from the face of the building which they are to serve. They may be of either the post indicator type or the rising stem and yoke type installed in a pit, as indicator valves generally in grassed areas, and use the rising stem and yoke type installed in underground pits in paved areas. Fire pumping stations shall comply with MIL-HDBK-1008C and NFPA Codes 20 and 24, as appropriate, and shall be designed by persons experienced in design of fire protection systems.

8.11.2.3 Sewage Collection System:

8.11.2.3.1 Gravity Mains. Where more than one building is involved, use gravity type sewage collection mains. Design is to conform to the applicable requirements of TM 5-814-1 (or AFM 88-15, Chap. 11, for Air Force projects). Size gravity sewers to discharge the expected peak rate of flow. The minimum size of sewer mains (not house sewers) shall be 8 inches [200 mm]. The sewers will normally be laid on sufficient slope to provide a velocity of at least 2 feet [600 mm] per second at the average daily flow or average hourly flow rate and a minimum velocity of 2.5 - 3.5 feet per second [760 - 1066 mm/s] at peak diurnal flow rate. See TM 5-814-1 or (AFM 88-15, for Air Force projects). Locate sewage collection mains by the topography of the site to keep excavation for these lines to a minimum.

8.11.2.3.2 Force Mains and Sewage Lift Stations. Where more than one building is involved, if gravity type sewers cannot be provided, sewage pumps will be installed in a sewage lift station constructed on the lowest terrain in the vicinity. As force mains do not require any specific grade for satisfactory operation, they shall be constructed as straight, short, and shallow as possible. In this section of the United States, they are generally installed 30 inches below final grades for the area. Force mains and sewage lift stations shall conform to the

applicable requirements of TM 5-814-2 (or AFM 88-15 for Air Force projects). The capacity of the lift station shall be sufficient to handle rates of sewage flow, determined in accordance with TM 5-814-1 (or AFM 88-15 for Air Force projects). Sewage pumps must be designed to meet actual head conditions of the force main provided for the lift station. The design point on the pump characteristic curve shall be determined by plotting this curve against the system head-capacity curve. The system head curve shall be obtained by combining friction head, static head, and velocity head curves. Where pumps operate in parallel or series, combined curves will be provided. Intersection of characteristic curve with system head curve shall be the design point. Major items of equipment shall be described with sufficient clarity to permit a definite selection for cost estimating purposes from manufacturers' catalog data where appropriate grinder-type pumps will be considered.

8.11.2.3.3 Septic Tank and Tile Field. Design septic tanks and tile fields in accordance with applicable State criteria. Specify prefabricated septic tanks where locally available in the required size.

8.11.2.3.4 Oil-water separators shall be provided as required by AFM 88-15, Chapter 15, Section G, paragraph 15-54, and shall be designed in accordance with API criteria, Publication 421. A grit chamber shall be designed for upstream installation of the separator where grit is prevalent in the waste.

8.11.2.4 Treatment Plants. For water and wastewater treatment plants see specific instructions to the A-E contained in Section Environmental, of Appendix A of his contract.

8.11.2.5 Seismic Provision. All projects will include appropriate provision for protection of piping, equipment, and underground utilities against damage from seismic events in accordance with TM 5-809-10 (AFM-88-3, Chapter 13).

8.11.2.6 Fire protection using AFFF systems shall comply with the requirements of MIL-HDBK 1008C. Provide a means for containing and disposing AFFF foam solution runoff.

8.12 **SUPPLEMENTAL TECHNICAL REQUIREMENTS**.

8.12.1 Water Supply.

8.12.1.1 Vertical turbine pumps larger than 5 hp [3.7 kw] shall conform to AWWA E-101 and CEGS-11212, PUMPS: WATER, VERTICAL TURBINE.

8.12.1.2 Design of water treatment plants shall conform to TM 5-813-3/AFM 88-10, Volume 3, and applicable State Public Health Department criteria for public water supplies and Recommended Standards for Water Works (Ten States' Standards).

8.12.1.3 Small isolated facilities will utilize a hydropneumatic pressure tank and, if appropriate, a ground storage reservoir. Small systems will normally be located in a protective building.

8.12.1.4 Supply and distribution piping shall comply with TM 5-813-5/AFM 88-10, Chapter 5, and AFM 88-15, Chapter 15.

8.12.1.5 Water storage designs shall comply with TM 5-813-4/AFM 88-10, Chapter 4; AFM 88-15; and AWWA D100. Specifications shall be based on current CEGS specifications, as appropriate.

8.12.1.6 In computing head losses due to friction in a distribution system, the Hazen-Williams formula as given below will be used.

$$h = 0.002083L \times (100/C)^{1.85} \times (gpm^{1.85}/d^{4.8655})$$

8.12.1.7 Hydraulic analyses will normally be made using a value of C = 100 for the roughness coefficient; however, consideration should be given to the use of coefficients greater than 100 when specifying concrete or plastic pipe. Coefficients greater than 130 should not be used. Asbestos-cement pipe shall not be used.

8.12.1.8 Fire hydrant branches shall not be less than 6 inches [150 mm] in diameter, shall be as short in length as possible, and shall have a gate valve.

8.12.1.9 Locate water mains at least 10 feet [3050 mm] horizontally from sewers or drain lines. When required, a minimum horizontal separation of 6 feet [1830 mm] can be allowed, but the bottom of the water main must be at least 12 inches [300 mm] above the top of the sewer.

8.12.1.10 Where water mains must cross sewers they shall conform to the requirements of TM 5-813-5/AFM 88-10, Volume 5, Chapter 3.

8.12.1.11 Water mains crossing railroads shall be installed in protective casings conforming to the requirements of American Railway Engineering Association (AREA), Volume 1. Design should specify method of construction for each particular site (open cut vs. jacking).

8.12.1.12 Water mains located in airfield pavement shall conform to the requirements of TM 5-813-5/AFM 88-10, Volume 5.

8.12.1.13 Control valves shall be provided on distribution systems in accordance with TM 5-813-5/AFM 88-10, Volume 5.

8.12.1.14 Air release and vacuum relief valves shall be provided in accordance with the requirements of TM 5-813-5/AFM 88-10, Volume 5.

8.12.1.15 Fire hydrants shall be provided in accordance with the requirements of TM 5-813-5/AFM 88-10, Volume 5, Chapter 5; and NFPA 24. Hydrants should not be located closer than 25 feet [7.6 m] to a building and should be located not more than 7 feet [2130 mm] nor less than 6 feet [1830 mm] from the edge of a paved roadway surface. Residual pressures at fire hydrants should not be less than 10 psi [70 kPa] when flowing at the desired rate.

8.12.1.16 Thrust blocking shall be provided in accordance with TM 5-813-5/AFM 88-10, Volume 5, Appendix C; and current CEGS specification.

8.12.1.17 Where the base distribution system is unable to provide the quantity of water at the required residual pressure needed for sprinkler systems and hose streams, the designer will analyze the system and provide pumping equipment and, if appropriate, ground storage. A complete design analysis is required, including fire-flow test data. Pumping stations shall conform to the requirements of NFPA 20. Pumping stations for aircraft hangars will conform to the above referenced TM/AFM, Appendix I, except that fire pumps will be diesel engine driven. Provide post indicating cutoff valves in accordance with NFPA 24.

8.12.1.18 Water for domestic purposes and fire protection for special projects such as reserve centers shall be provided in accordance with the requirements of TM-813-7/AFM 88-10, Volume 7.

8.12.1.19 Service lines to new buildings shall be sized to meet peak building demands in accordance with TM 5-810-5/AFM 88-15. Pressure drop between street main and building should not exceed 10 psi/100 feet [2.26 kPa/m] at peak rate. Provide control valves in accordance with current CEGS specification.

8.12.1.20 All water mains, and storage tanks shall be effectively sterilized with chlorine solution and tested bacteriologically safe in accordance with AWWA Standards before placing them in service. See current CEGS specifications.

8.12.1.21 Storage reservoirs shall be provided with cathodic protection when required.

8.12.1.22 Hydropneumatic Pressure Systems.

8.12.1.22.1 Use at small activities where the demand is not enough to justify any other type of storage. Design the tank to meet pressure vessel requirements. Provide air compressors, safety valve, and sight glass, to show the tank air-water ratio. If the tank is less than 500 gallons [1800 Leters], a bleeder valve with a snifter valve in the well discharge pipe will be used in lieu of the air compressor.

8.12.1.22.2 Use 20 psi [138 kPa] pressure differential between high water level and low water level in the hydropneumatic tank with high water/high pressure set at the tank's one-half mark.

8.12.1.22.3 Tank Capacity. Determine the tank usable capacity when the operating pressure is between 60 and 40 psi [413 and 275 kPa]. At 60 psi [413 kPa] the tank is one-half full. First, determine the usable volume (%). Always use tank volume as 1/2 full at its highest operating pressure, i.e 60 psi [413 kPa].

$$(P1/P2 - 1)\ (100\text{-}V) = \%$$

Example.

P1 = 60 + 14.7 = 74.7 V1 @ 50%

P2 = 40 + 14.7 = 54.7

(74.7/54.7 -1) (100-50)

(1.36 - 1) x 50 = 18.3%)
Therefore 18.3% = Usable volume for this particular condition.

If the well or source can produce water (gpm) at the rate equal to the average demand (gpm) then the usable volume should be 2.5 times the average demand. Therefore, the tank capacity is Q= 2.5 X average demand.

If the produced water is less than the average demand (gpm) then the multiplier factor should be 5 or more.

8.12.1.22.4 Compressed Air. Compressed air is supplied for tank operation according to the tank capacities. Provide 2.0 CFM [1 L/s] for capacities from 500-3,000 gallons [1800-10 000 L] and each additional 3,000 gallons [10 000 L] or fraction thereof. Quantities are expressed in CFM free air at pressure equal to the high-pressure maintained within the hydropneumatic tank.

8.12.1.22.5 Controls. The controls of a hydropneumatic system shall maintain the predetermined pressures, water levels, and air-water ratio within the tank. Controls shall admit compressed air into the tank only when tank pressure at high-water level is 2 psi [13.8 kPa] below high pressure and an air volume control.

8.12.1.22.6 Provide chlorine disinfection system for water to be consumed by humans. Size to provide 1 mg/l chlorine residual when flowing at the peak 4-hour rate. Consider using hypochlorinators for intermittent pumping rates up to 200 gpm [800 L/min] or when maximum chlorine demand is less than 3 pounds per day [1.36 kg]. Chlorine gas shall be used for larger pumping rates or chlorine demands.

8.12.2 Wastewater Treatment and Disposal.

8.12.2.1 Design of onsite treatment disposal facilities shall conform to applicable criteria published by the appropriate State Public Health Department, and Manual of Septic Tank Practice by Department of Health, Education and Welfare.

8.12.2.2 Where onsite soil conditions are such that the septic tank and tile field system cannot be used, consideration will be given to use of septic tank and subsurface filter system. A composting system may be considered. Design must conform to the above referenced documents for septic tanks.

8.12.2.3 Gravity Sewers (TM 5-814-1/AFM 88-11, Vol.1).

8.12.2.3.1 Provide a minimum of 2 feet [600 mm] of cover over pipe.

8.12.2.3.2 Manholes are required at the end of laterals and at each change of direction or slope.

8.12.2.3.3 Distance between manholes shall not exceed the following:

Diameters less than 18" [500 mm]	400' [122 m]
Diameters 18" [500 mm] and greater	600' [183 m]

8.12.2.3.4 Drop connections are required at manholes when the invert of the inlet pipe is more than 18 inches [500 mm] above the manhole floor.

8.12.2.3.5 Minimum size building sewer connections shall be 6 inches [150 mm] in diameter with at least 0.6 percent grade.

8.12.2.3.6 Sewers shall be laid with sufficient slope to ensure cleansing velocities.

8.12.2.3.7 Capacity of building sewer connections, except for barracks, shall be based on fixture units. Barracks capacity shall be based on population.

8.12.2.3.8 Minimum size sewer mains between manholes shall be 8 inches [200 mm] in diameter.

8.12.2.3.9 Use Manning's formula for computing gravity flows in sewers. Use n = .014 for pipe 10 inches [250 mm] and smaller and n = .013 for pipe larger than 10 inches [250 mm].

8.12.2.3.10 Deep sewers shall be analyzed for excessive loads using the equations of TM 5-814-1, Paragraph 12.

8.12.2.3.11 Selection of pipe materials shall consider structural loads, soil conditions, and characteristics of transported wastes.

8.12.2.3.12 Design analyses are required for sizing all 8-inch [200 mm] and larger sewers.

8.12.2.4 Pumping Stations (TM 5-814-2/AFM 88-11, Volume 2; AFM 88-15, Chapter 11, Paragraph 3).

8.12.2.4.1 Force mains shall be analyzed for water hammer conditions.

8.12.2.4.2 Minimum size force mains where nonclog pumps are used is 4 inches. Smaller pipe sizes can be considered when grinder pumps are used.

8.12.2.4.3 Small lift stations will be of the wet-pit, submerged-pump type.

8.12.2.4.4 Pumping capacity will be adequate to discharge the peak flow rates when the largest pump is out of service. Each pumping unit will be of the constant speed type, and will be capable of discharging the extreme peak wastewater flow rate and shall alternate between discharges.

8.12.2.4.5 Overflows shall not be provided.

8.12.2.4.6 A complete design analysis is required.

8.12.2.4.7 Force mains shall be provided with a minimum of 30 inches [760 mm] cover.

8.12.2.4.8 Systems head curves are required for all pumping systems.

8.12.2.5 Wastewater treatment plant designs shall conform to applicable State criteria; and Recommended Standards for Sewage Works (Ten States' Standards). Designs will be based on meeting National Pollution Discharge Elimination System (NPDES) discharge permit limitations for the site.

8.12.2.6 Treatment plants for industrial wastes shall conform to AFM 88-15, Section F, and TM 5-814-8, Chapter 6. Designs will be based on meeting NPDES discharge permit limitations for the site.

8.12.2.7 Wastewaters containing oils shall be treated in accordance with the requirements of AFM 88-15, Section F. Gravity oil-water separators cast-in-place type shall be provided on aircraft and vehicular washracks, tactical equipment shops and industrial facilities for the Army prior to discharge to central sewage collection systems. Oil separator shall be designed to API standard and in accordance with ETL 1110-3-466 "Selection and Design of Oil/Water Separators at Army Facility." Where central sewage systems are nonexistent, package type oil-water separators meeting state discharge criteria are required. Oil/water separators for the Air Force shall be of the cast-in-place type. The SAS_STD CD has example design of oil separator to API standard in the DETAILS directory in DGN format. Grit separators are required to be located ahead of oil-water separators. Flow rate for washracks shall be based as follows:

Number and capacity of hose bibbs

Waste generated

Storm runoff is $Q = CIA$

Where $Q =$ Runoff in cubic feet per second
$C =$ Imperviousness factor (1 = pavement and 0.4 = soil)
$I =$ Average rainfall intensity in inches/hour
$A =$ Drainage area in acres. Adjacent area should be sloped away from the drainage area.

10-YEAR STORM

Design Storm	5	10	15	20	25	30	35	40	45	50	55	60
	----------tc in minutes----------											
2-2	6.7	5.7	4.8	4.2	3.8	3.5	3.1	2.9	2.8	2.6	2.4	2.2
2-4	7.1	6.0	5.1	4.5	4.1	3.8	3.4	3.1	3.0	2.8	2.6	2.4
2-6	7.6	6.3	5.4	4.8	4.4	4.0	3.6	3.3	3.2	3.0	2.8	2.6
2-8	8.0	6.7	5.7	5.1	4.6	4.2	3.9	3.7	3.4	3.2	3.0	2.8
3-0	8.4	7.0	6.1	5.4	4.9	4.6	4.2	3.9	3.6	3.4	3.2	3.0

Ft. Fisher, NC = 3.0
Robins AFB, GA = 2.8
Winston-Salem, NC = 2.3
Seymour Johnson, NC = 2.9
Ft. Benning, GA = 2.8
Ft. Gordon, GA = 2.6
Ft. Bragg, NC = 2.8
Dobbins AFB, GA = 2.6
Hunter AAF, GA = 3.0
Pope AFB, NC = 2.8
Savannah, GA = 3.0
Moody AFB, GA = 2.8
Charleston, SC = 3.0
Ft. Stewart, GA = 3.0
Ft. McPherson, GA = 2.6
Ft. Jackson, SC = 2.6

NOTE: It is important for the first 10 minutes of a 10-year storm be caught and run through the oil/water separator. All quantities above this amount should be diverted to the storm drain.

CHAPTER A-8

ENVIRONMENTAL ENGINEERING

EXHIBITS

A-8-1 WATER FLOW TEST SUMMARY SHEET

A-8-2 STANDARD SANITARY SEWER AND WATER LEGEND

A-8-3 DESIGN ANALYSIS OF GRAVITY SANITARY SEWERS

A-8-4 OIL SEPARATOR SKETCH ES

CHAPTER A-9

COST ESTIMATES

INDEX

9.1 GENERAL
- 9.1.1 Cost Engineering's Mission and Function
- 9.1.2 Purpose
- 9.1.3 Scope
- 9.1.4 General Instructions

9.2 APPLICABLE PUBLICATIONS

9.3 PRECONCEPT DESIGN SUBMITTAL REQUIREMENTS
- 9.3.1 Preconcept Submittal

9.4 CODE 3 PROJECT ENGINEERING (PE) phase Army and 10% Air Force PROJECT DEFINITION DESIGN SUBMITTAL REQUIREMENTS.

- 9.4.1 Project Engineering (PE) Phase and Project Definition Submittals

9.5 CONCEPT/EARLY PRELIMINARY (35 PERCENT), S3 and S4 MEDICAL FACILITIES DESIGN SUBMITTAL AND DESIGN BUILD RFP REQUIREMENTS
- 9.5.1 General
- 9.5.2 Requirements
- 9.5.3 Design Build Requirements

9.6 SIXTY PERCENT (60 PERCENT) DESIGN SUBMITTAL REQUIREMENTS

9.7 PRELIMINARY (60 PERCENT) and S5 MEDICAL FACILITIES DESIGN SUBMITTAL REQUIREMENTS
- 9.7.1 General
- 9.7.2 Requirements

9.8 FINAL (100 PERCENT), S6 AND S7 MEDICAL FACILITIES DESIGN SUBMITTAL REQUIREMENTS
- 9.8.1 General
- 9.8.2 Requirements

9.9 CORRECTED FINAL DESIGN SUBMITTAL REQUIREMENTS
- 9.9.1 Notice
- 9.9.2 When to Submit

9.10 GENERAL INSTRUCTIONS
9.10.1 Additional Instructional Publications
9.10.2 Cost Estimate Overruns
9.10.3 Failure to Comply with Procedures
9.10.4 Cover Sheet Checklist
9.10.5 Estimates with More Than One Line Item
9.10.6 Proposed Bidding Schedule
9.10.7 Design Stage Identification
9.10.8 Copy Requirements
9.10.9 Budgetary Data
9.10.10 Basis for Budgetary Data
9.10.11 Plan of Construction

9.11 TYPED SUMMARY ESTIMATES
9.11.1 Preparation of Typed Summary Estimates
9.11.2 Location of Typed Summary in Submittal Package

9.12 QUANTITY TAKE-OFF
9.12.1 General
9.12.2 Requirements

9.13 WAGE RATES
9.13.1 Wage Rate Calculations
9.13.2 Estimate Submittal

9.14 INDIRECT COSTS (OVERHEAD)

9.14.1 Indirect Cost Categories
9.14.2 Prime Contractor's Overhead
9.14.3 Subcontractor's Overhead
9.14.4 Typical Field Overhead Items

9.15 PROFIT

9.16 BOND
9.16.1 Allocation for Bond in Cost Estimates

9.17 SUBCONTRACT WORK
9.17.1 Use of Subcontractors in Cost Estimate
9.17.2 Use of Subcontractor Quotations

9.18 TECHNICAL INSTRUCTIONS FOR MCACES ESTIMATES

9.18.1 Estimate Format
9.18.2 MCACES Software and Databases
9.18.3 Templates and Sample Projects
9.18.4 Supplemental Databases
9.18.5 Required Services
9.18.6 Starting the MCACES Project
9.18.7 Print Selected Reports
9.18.8 Save to Compressed

9.19 REPORT OF COST AND BUILDING/STRUCTURE ANALYSIS
9.19.1 General
9.19.2 Requirements

9.20 CONTRACT-MODIFICATION ESTIMATES
9.20.1 General
9.20.2 Requirements

EXHIBITS

CHAPTER A-9

COST ESTIMATES

9.1 GENERAL.

9.1.1 Cost Engineering's Mission and Function. The Cost Engineering Branch is responsible for cost estimates for all military, environmental restoration and civil works projects designed by the Savannah District and furnishes estimating support to others. This Branch prepares Value Engineering estimates and acts as a cost consultant to the district. This branch also reviews Contractor's bids on construction projects and makes recommendations for award or rejection. Projects will be designed in U.S. measurements or Metric measurements. The Specific Instructions for the A-E's contract will be provided at the Pre-Design Conference and will define the project as either U.S. or Metric design. When the project is a metric design all units of measure and cost data referenced in this and other documents for this project shall be changed to Metric Units of Measure and Metric Cost Data. This document contains information and instruction for preparing Military, Hazardous Radioactive and Toxic Waste, and Civil projects. In most cases the project will fall into one of these type estimates based on funding sources. The Specific Instructions will define the type of project. The A-E should disregard paragraphs in this document that do not pertain to the type of project in their contract.

9.1.2 Purpose. The purpose of this chapter is to provide specific guidance for the preparation of cost estimates for construction projects. Estimates are prepared for programming, controlling costs during design, evaluating bids, assisting in negotiations, and to serve as a guide in establishing a schedule of payments. Often these estimates are also used to evaluate the reasonableness of the Contractor's proposal for negotiated procurement contracts. As such, estimates must be current, complete, and accurate.

9.1.3 Scope. Estimates shall be based on the most recent and complete design information available and shall follow the format of the appropriate Work Breakdown Structure (WBS). There are three (3) separate Work Breakdown Structures, Military, Environmental Restoration, and Civil Works. The Military WBS shall be used for all vertical building construction whether Military, Environmental Restoration or Civil Works funded. Environmental Restoration projects shall use the Hazardous, Toxic, Radioactive Waste (HTRW) WBS (funded by DERO, Superfund, DOE, etc). The Civil Works WBS shall be used for large earth moving/dredging projects normally funded with non-military funds. The final design estimate shall reflect the expected cost to the Government for performing the work by contract and be prepared in the same careful manner as if the estimator were bidding in competition with prudent, experienced, and well-equipped Contractors. All reasonable costs which a Contractor might be expected to anticipate and include in his proposal shall be included in the Government Estimate. The estimate shall reflect the local labor situation and material prices anticipated or forecast to prevail in the vicinity of the project at the

time the project is scheduled to be constructed. Should any question or doubt concerning procedure arise, Savannah District shall be contacted to obtain explanation and clarification as required.

9.1.4 General Instructions. Savannah District will provide MicroComputer Aided Cost Engineering System MCACES estimating software, "User Manuals," and the current Savannah District Databases to be used in the preparation of the construction cost estimates under this contract. The "MCACES" software, as provided by Savannah District, is commercial software, licensed to Corps of Engineers. It is to be used by Architect-Engineer (A-E) firms under contract to Savannah District in conjunction with the projects being designed. The A-E's Cost Engineer/Estimator/Consultant that will be using the MCACES software shall make an appointment with Savannah District's Cost Engineering Branch to travel to the District Office to obtain a copy of the software and hands-on instructions for using the software, within one (1) month of Notice to Proceed. This appointment shall be coordinated with the District's Project Manager. The A-E shall read and sign the Software User Agreement as provided with the software and user manual. The signee shall be the A-E's point of contact for future releases and updates of software and databases. The Software User Agreement, after being signed, shall be returned as specified in the agreement. The Software, manuals and databases will be provided to the A-E at the above referenced visit to the District Office. A waiver for this required visit may be provided only by written authorization by the Chief of Cost Engineering Branch, Savannah District. See paragraph 9.9 for general instructions and guidance pertinent to the preparation of cost estimates for all submittal levels. It is highly recommended that the A-E's Cost Engineer/Estimator/Consultant successfully completes Certified Formal Training on MCACES version 5.30 or later, before attempting to prepare estimates for Savannah District. Contact the Cost Engineering Branch for additional information on training.

9.1.4.1 System Requirements and Options - The MCACES estimating software required for use in this contract requires the following systems.

9.1.4.1.1 Computer - MCACES runs on IBM PC's, PS/2's, and 100 percent compatible personal computer. The program requires a minimum of 525,288 bites of conventional memory available for program use. Most TRS programs will have to be deactivated to run MCACES unless they can be loaded to run in expanded or extended memory.

9.1.4.1.2 Disk Space - A minimum of 30Mb hard disk and 1.Mb floppy diskette drives are highly recommended.

9.1.4.1.3 Operating System - MCACES runs in conjunction with DOS, Version 3.3 or higher. DOS, Version 6.0 or higher is recommended.

9.1.4.1.4 Expanded or Extended Memory - MCACES can run under DOS and LAN software in 524,288 bytes of available conventional memory. However, significant

performance improvements are achieved if your computer has expanded or extended memory available for program use. This extra memory is used to store and quickly access frequently-used portions of the program. In general, extended memory will provide better performance than expanded memory. The expanded memory manager must be compatible with EMS 3.2 or higher. The extended memory manager must be compatible with XMS 2.0 or higher. MCACES attempts to use up to 768 Kb of each type of memory.

9.1.4.1.5 Mouse - MCACES is designed to be used with or without a mouse.

9.1.4.2 MCACES Gold Tutorial Diskette - The MCACES Gold Tutorial Diskette and Instructions are contained in Enclosure 2. This is provided as information only and may be used by new MCACES users for familiarization and practice exercises.

9.2 **APPLICABLE PUBLICATIONS**.

MCACES Gold Users Manual, Vol. I & II
Military Work Breakdown Structure
Hazardous, Toxic, Radioactive Waste Work Breakdown Structure
Civil Work Breakdown Structure
EI 01D010, Construction Cost Estimates
EP 1110-1-8, Construction Equipment Ownership and Operating Expense Schedule-Region III (Current Date)
ER 1110-1-1300, Engineering and Design Cost Engineering Policy and Requirements.
ER 1110-2-1302, Engineering and Design Civil Works Cost Engineering.
ER-1110-3-1300, Engineering and Design Military Programs Cost Engineering.
ER-1110-3-1301, Engineering and Design Environmental Restoration Cost Engineering.

9.3 **PRECONCEPT DESIGN SUBMITTAL REQUIREMENTS**.

9.3.1 Preconcept Submittal. No Cost Engineering requirements for this submittal.

9.4 **CODE 3 PROJECT ENGINEERING (PE) Phase ARMY and 10% AIR FORCE PROJECT DEFINITION DESIGN SUBMITTAL REQUIREMENTS**.

9.4.1 Project Engineering (PE) Phase and Project Definition Submittal. When the project is defined as a Project Engineering (PE) Phase authorized under a design directive “Code 3" the Cost Engineering Requirements will be defined in the Specific Instructions for that project. See EXHIBIT A-9-17 for A-E Contract Submittal Registry.

9.5 **CONCEPT/EARLY PRELIMINARY (35 PERCENT), S3 and S4 MEDICAL FACILITIES, and DESIGN BUILD DESIGN SUBMITTAL REQUIREMENTS**.

9.5.1 General. The concept estimate shall be prepared in accordance with the following general instructions.

9.5.1.1 The concept estimate shall be a MCACES Gold Estimate generated on the software furnished for use under this contract and the format of the estimate shall follow the appropriate Work Breakdown Structure. For the term of this contract the acronym MCACES shall mean computer generated estimate by MCACES Software, Databases and Work Breakdown Structure (WBS) provided by Savannah District in accordance with the instructions contained herein.

9.5.1.2 General. The concept estimate will be used to program funds for the respective project. Frequently these funds, once appropriated, cannot be increased. It is, therefore, imperative that this estimate includes costs for every item that will be in the project. The A-E must be absolutely certain that the project can be built for the CWE shown on the concept estimate. During the design period, close cost control, consisting of coordination between designer and cost engineer, shall be exercised to achieve an accurate estimate.

9.5.2 Requirements. The concept estimate shall be prepared in accordance with the following instructions. In addition to the following instructions, the A-E shall read and comply with paragraph 9.17. See EXHIBIT A-9-17 for A-E Contract Submittal Registry.

9.5.2.1 The MCACES Software shall be installed as provided following all instructions. The A-E shall work through the MCACES Software Manual, Vol I, and become familiar with the program. The A-E shall use the installation instructions provided separately with the software and not the installation instructions in the manual. Some of the databases provided are in a "Protected Mode" and the user cannot edit these databases. Once items from these databases are brought into the project, they may be edited to reflect conditions for that project. Specific Project Templates are provided by CESAS-EN-C and shall be used to create the project. See paragraph 9.17 for details. The Project Templates provided already have the structure set so skip chapters 2, 5, 10, 11, 13, 20, 22, 24, and 25. Working Appendix A, "Learning Gold," will help in getting familiar with the software. You should skip Lesson 2 as the project structure is predetermined for the project.

9.5.2.2 The list of subcontractors located under the Prime Contractor in the Project Information Record within the MCACES Project Template are defaulted from the Unit Price Database. The Savannah District acknowledges the fact that there can be more or fewer subcontractors than those indicated, depending on the size and/or type of project being designed. There can also be several different subcontractors within a system, such as carpeting contractors and painting contractors within WBS System 06 - Interior Finishes. These subcontractors shall be broken out and defined in the Project Information Record within the MCACES estimate.

9.5.2.3 Prepare a quantity take-off, using EXHIBIT A-9-7 as a guide, as described in paragraphs 9.11 through 9.11.2.7 of this manual. The estimator shall note all assumptions as to scope and design used in preparation of the estimate. These assumptions shall include WBS systems contained within the project. Proper allowances shall be made for WBS system and subsystems not completely determined in the drawings, outline specifications or design analysis. Ref. paragraph 9.11 for additional instructions.
9.5.3 Design Build Requirements. The Design Build Concept estimate shall be prepared in accordance the instructions in paragraphs 9.5.2.1 through 9.5.2.3 above and the following general instruction. In addition the AE shall ask about Project Specific Instruction for the project which may contain additional or alternate requirements.

9.5.3.1 The cost estimate for this project submittal shall be a MCACES estimate prepared using the Military Work Breakdown Structure. As a minimum the Primary Facilities shall be estimated down to the System Level (Level 3) complete to the 1.5M building line unless changed by the Project Specific Instructions. The Support Facilities outside the 1.5M line shall be estimated down to the Assembly Level (Level 6) with details at Level 7 and to the same degree of detail as reflected in EXHIBIT A-9-16, SAMPLE CONCEPT/DESIGN BUILD ESTIMATE. The estimate shall be created from Savannah District Databases using the SAS Project Templates. Reference paragraph 9.12.3.1.1 Military Estimate Hierarchy.

9.6 **SIXTY PERCENT (60 PERCENT) DESIGN SUBMITTAL REQUIREMENTS**. The 60 percent requirements for preparation of cost estimates are the same as the requirements listed below for the Preliminary (60 Percent) Design Submittal Requirements.

9.7 **PRELIMINARY (60 PERCENT), and S5 MEDICAL FACILITIES DESIGN SUBMITTAL REQUIREMENTS**.

9.7.1 General. Cost estimates for all construction projects shall be a MCACES type estimate generated by "MCACES" Software and prepared in accordance with instructions contained herein and in accordance with EXHIBITS A-9-1 through A-9-13 of this manual.

9.7.2 Requirements. The preliminary estimate shall be prepared in accordance with the following instructions. In addition to the following instructions, the A-E shall read and comply with paragraph 9.17. See EXHIBITS A-9-1 through A-9-13 of this manual.

9.7.2.1 Prepare a quantity take-off, in accordance with appropriate Work Breakdown Structure (WBS), using reference paragraph 9.1.3. Specific requirements are described in paragraphs 9.11 through 9.11.2.7 of this section. The estimator shall show all assumptions as to scope and design used in the preparation of the estimate. These assumptions shall include WBS systems contained within the project. Proper allowances shall be made for WBS systems and subsystems not completely determined in the

preliminary drawings, outline specifications or design analysis. Reference paragraph 9.11 for additional instructions.

9.7.2.2 In addition to the quantity take-off, the A-E's shall submit a list of the principal items of equipment (such as cranes, elevators, kitchen equipment, pumps, compressors, unit heaters, air conditioners, fans, etc.), indicating the name of manufacturers and positive identification of items selected.

9.7.2.3 Special attention shall be given to the evaluation of the item General/Prime Contractor's Indirect Costs. These cost items are explained in detail later in this manual, see paragraph 9.13. An itemized list of field overhead indirect costs shall be prepared as part of the preliminary, final and corrected final submittals.

9.7.2.4 The A-E shall use the profit weighted guide to prepare a detailed profit for the prime Contractor and major subcontractors, see EXHIBIT A-9-6, also see paragraph 9.14.

9.8 **FINAL (100 PERCENT), S6 and S7 MEDICAL FACILITIES DESIGN SUBMITTAL REQUIREMENTS**.

9.8.1 General. Final design cost estimates for all construction projects shall be a MCACES type estimate generated by MCACES and prepared in accordance with instructions contained herein and in accordance with EXHIBITS A-9-1 through A-9-13 of this manual.

9.8.2 Requirements. The final estimate shall be prepared in accordance with the following instructions. In addition to the following instructions, the A-E shall read and comply with paragraph 9.17.

9.8.2.1 Prepare a Plan of Construction that is consistent with the requirements of the specifications and in accordance with the current construction practice. See the sample plan on page B-4 of EI 01D010 for instructions on how to prepare this plan.

9.8.2.2 A complete and detailed quantity take-off, prepared in accordance with paragraphs 9.11 through 9.11.2.7 of this section, and accompanying cost estimate shall be submitted with the final design. The quantity take-off and cost estimate shall be an accurate representation of the completed design submitted.

9.8.2.3 In addition to the quantity take-off the A-E's shall submit a list of the principal items of equipment (such as cranes, elevators, kitchen equipment, pumps, compressors, unit heaters, air conditioners, fans, etc.) and any specialty items (such as glazed acrylic canopies, metal pan ceilings, etc.) indicating the name of manufacturers and positive identification of items selected. Price quotations on all items listed above and on all other large dollar items in the estimate will be submitted as part of the estimate backup.

9.8.2.4 An itemized detailed list of indirect costs shall be part of the final design estimate, see paragraph 9.13 this chapter.

9.8.2.5 The A-E shall use the profit weighted guide to prepare a detailed profit for the prime Contractor and major subcontractors, see EXHIBIT A-9-6.

9.9 **CORRECTED FINAL DESIGN SUBMITTAL REQUIREMENTS**.

9.9.1 Notice. Corrected final submittals are not considered a normal design level and are required only when final submittals must be revised or corrected due to error or omission.

9.9.2 When To Submit. The A-E shall submit a corrected final estimate if any design revisions have been made since the final submittal that will in any way affect the cost of the project. This estimate shall be prepared utilizing all the above described instructions and incorporating all the corrections, revisions, final design comments, etc., made to the design since the final design submittal. All changes to the estimate shall be described and identified in the PROJECT NOTES, see EXHIBIT A-9-9. This estimate will be submitted in duplicate with the corrected final design submittal. See EXHIBIT A-9-16 for A-E Contract Submittal Registry.

9.10 **GENERAL INSTRUCTIONS**.

9.10.1 Additional Instructional Publications. Cost estimates for all construction projects shall be prepared in accordance with the instructions and exhibits outlined within this manual and instructions within EI 01D010 "Engineering Instructions – Construction Cost Estimates", the Work Breakdown Structures and MCACES Users Manual.

9.10.2 Cost Estimate Overruns. It is the A-E's responsibility to design the project so that the CWE is equal to or less than 95 percent of the programmed amount. However, if for some reason beyond the A-E's control the project should exceed 95 percent of the programmed amount, the A-E shall submit the following: (1) the cost estimate showing a base bid that is equal to or less than 95 percent of the programmed amount; (2) a list of additives; and (3) a written narrative explaining the reasons why the CWE exceeds 95 percent of the programmed amount. A written narrative shall also be submitted whenever the current estimate has changed more than 5 percent (plus or minus) from the previous estimate. In the case of the concept estimate, variations of 5 percent from the DD Form 1391 shall be explained in narrative form.

9.10.3 Failure to Comply with Procedures. Failure of the A-E to conform to the procedures outlined within this or referenced manuals will result in the estimate being rejected and shall be resubmitted with deficiencies corrected. If time is a factor, the A-E

shall come to Savannah District within 48 hours for a face-to-face meeting and may be required to furnish a corrected cost estimate before leaving the Savannah District office.

9.10.4 Cover Sheet Checklist. The checklist shown as EXHIBIT A-9-1 shall be filled in and used as the cover sheet for each cost estimate submittal. Access to each estimate and its contents shall be limited to those persons whose duties require knowledge of the estimate. Each submittal shall include a list of individuals' names who have access to the total amount of the estimate. Reference EXHIBIT A-9-2 "CWE ESTIMATE SIGNATURE SHEET."

9.10.5 Estimates With More Than One Line Item. When the A-E design contract includes more than one "Line Item Number," preparation of a separate detailed cost estimate and associated summaries for each line item is mandatory on all submittals.

9.10.6 Proposed Bidding Schedule. The A-E shall submit a proposed Bidding Schedule, see EXHIBIT A-9-10, with each submittal. Note the additives broken out from the base bid items. This schedule shall list all primary facilities separately (Building complete to 5 feet outside the building) and support facilities following the WBS format.

9.10.7 Design Stage Identification. All sheets of the cost estimate and quantity take-off shall be clearly marked as to the design stage (concept, preliminary, final, etc.) the estimate represents. The design stage identity shall be entered in the "REPORT TITLE" field of the "PRINT SELECTED REPORTS" entry screen from the REPORT Menu of MCACES Software. (Reference Fig. 23.6: page 23-19 MCACES Gold Software Manual, Vol I.)

9.10.8 Copy Requirements. The summary and detailed cost estimate, quantity take-off sheets and all other exhibits and/or information required by this or referenced manuals shall be submitted in triplicate on 8-1/2" x 11" bound sheets. This shall be done for all submittal levels including modification estimates. Electronic copies of the project database shall be provided for all submittals. This database shall be "SAVE TO COMPRESSED" (floppy diskettes) from the SERVICES menu of the MCACES Software. (Reference paragraph 24.4, page 24-6 MCACES Gold Software Manual, Vol I.)

9.10.9 Budgetary Data. The budgetary data furnished to the A-E is not to be considered restrictive. The A-E is totally responsible for good economical design in development of the site and functional arrangements of the facility. The District shall be notified of any proposed changes as soon as the need for the change has been firmly established.

9.10.10 Basis for Budgetary Data. Budgetary Data will be based on requirements established in the Project Development Brochure, in judgements made after acquisition and evaluation of essential engineering field information, and on subsequent design to the extent that it has been accomplished.

9.10.11 Plan of Construction. A plan of construction will be submitted as a part of the support to the estimate with each cost estimate submittal. The plan of construction shall be prepared in accordance with current construction practices and shall be consistent with the requirements of the plans and specifications. The plan shall include the full period from the beginning of mobilization to and including cleanup and final acceptance of the work by the Contracting Officer. An example of a plan of construction is shown on page B-4 of EI 01D010.

9.11 **TYPED SUMMARY ESTIMATES**.

9.11.1 Preparation of Typed Summary Estimates. EXHIBIT A-9-5 shows an example of a typed summary format. This summary estimate shall be prepared for all concept, preliminary, final and corrected final submittals. The typed summary format shall be completed in accordance with instructions contained below:

9.11.1.1 Use a price level of present day contract costs. The cost summary shall be escalated, see EXHIBIT A-9-5, to the midpoint of construction. Army and/or Air Force escalation factors will be provided by the Cost Engineering Branch, Savannah District.

9.11.1.2 The estimated construction time, in calendar days, for the total project shall also be shown. Calendar days are entered in the "EST CONSTRUCTION TIME" field of the "REPORT TITLE PAGE" screen from the REPORTS Menu. (Reference Figure 23.4: Page 23-13 MCACES Gold Software Manual, Vol. I.)

9.11.1.3 EXHIBIT A-9-5 shows Contingencies at 2 percent of the Escalated Contract Cost, SIOH at 6 percent of the subtotal of the Escalated Contract Cost and Contingencies and OCE Contingencies at 3 percent of the Escalated Contract Cost (ECC). These percentages are for use with MCA funded projects only. All OMA funded projects will use a l0 percent contingency factor, a 7.5 percent SIOH factor and a 0 percent OCE Contingency factor. The above percentages are entered on the "EDIT OWNER" entry screen located from the TITLE LEVEL where owner cost is set. (Reference Figure 7:4, page 7-20, MCACES Gold Software Manual, Vol. I.)

9.11.2 Location Of Typed Summary In Submittal Package. Reference page 5-2 of TM 5-800-2 for correct location in the estimate composition.

9.12 **QUANTITY TAKE-OFF**.

9.12.1 General. The following are general instructions emphasizing the new required Work Breakdown Structure and the importance of the quantity take-off and the personnel authorized to prepare/review this information. When the project is Metric Design the quantity take-off shall be metric.

9.12.1.1 The importance of accurate and concise quantity take-off to the estimate cannot be over stressed. The following procedures and exhibits must be followed in order for the A-E to have an acceptable cost estimate. If a spot check of quantities by the District reveals inaccuracies or the required format has not been used in the preparation of the estimate, the estimate will be rejected and must be resubmitted with the deficiencies corrected. The quantity take-off is required to follow one of the following Work Breakdown Structures (WBS).

9.12.1.1.1 The Military WBS as provided by Savannah District shall be used on all Military Construction Projects (MCP) projects. The Military WBS provides a common Tri-Service framework for preparing cost estimate, modeling development, and collecting historical data for all conventional MCP projects. This Military WBS is a hierarchical structure comprised of six levels: 1) Primary/Supporting Facility; 2) Facility; 3) System; 4) Subsystem; 5) Assembly Category; 6) Assembly, and followed by line item detail. Each system is divided into one or more subsystems which are further divided into assembly categories, then assemblies. Assemblies are made up of construction line items. The System, Subsystem, and Assembly Category Titles are rigidly defined and shall not be changed. An Assembly is a collection of individual cost items that function together as a single building/construction unit. For example, a 300 mm (12-inch) storm drainage line consists of excavation, backfill, compaction, layer of drainage gravel, 300 mm (12-inch) concrete pipe, etc. One unit of an assembly contains a specified quantity and unit of measure of each included item. The Assembly has its own unit of measure. When the assembly is "linked" and the assembly quantity is changed all included item quantities are changed proportionately. Assemblies shall be created for building/construction systems as required by the project. In no case shall the WBS title descriptions be changed for levels three through five. New titles for Subsystems or Assembly Categories shall be entered under the "Other" category. See the Military WBS. Note that the 01 through 15 Systems are for the interior of the building (5-foot line outside the building) and System 16 Selective Building Demolition fall under Primary Facilities. Systems 17 through 20 are exterior systems and fall under Support Facilities.

9.12.1.1.2 HTRW (Hazardous, Toxic, or Radioactive Waste) Environmental Restoration Projects shall use the HTRW WBS as provided by Savannah District. The HTRW WBS provides the framework for preparing cost estimates, modeling development, and collecting historical data for all remediation projects. This HTRW WBS is a hierarchial structure comprised of six levels: 1) Bid Items; 2) Main Feature; 3) Sub-Feature, 4) Element; 5) Sub-Element; 6) Assembly, and followed by the line item detail. The Feature, Sub-Feature, Element, and Sub-Element Titles are rigidly defined and shall not be changed. The Assembly Titles are user defined and created. As a minimum, all estimates shall be prepared to the sixth level followed by detail. The quantity take-off shall be prepared following the WBS to the same level. Level six shall be created to further break down systems of work into Assembly Categories and Assemblies, respectively. Six levels of

titles shall always be created and Detail entered at level seven even if titles are duplicate titles. Example:

LEVEL 01 01 Bid Item No. 1
LEVEL 02 33 HTRW Remedial Action
LEVEL 03 06 Groundwater Collection and Control
LEVEL 04 07 Pumping/Collection
LEVEL 05 03 Piping LF
LEVEL 06 01 {USER CREATED TITLE} '4" PVC Treatment Line' LF
LEVEL 06 02 {USER CREATED TITLE} '6" PVC Treatment Line' LF
LEVEL 06 03 {USER CREATED TITLE} '8" PVC Treatment Line' LF

New titles for work not covered in title levels two through four in the WBS may be added under numbers 90 through 99. Maintaining this rigid structure for the first four levels will allow systematic collection of historical HTRW costs. Any vertical building construction required within the HTRW project shall be a separate estimate from the environmental work and shall follow the Military WBS. HTRW projects may have two distinct phases; construction of a treatment facility and operation and maintenance of the facility over a period of time that may range from months to years. Construction and operation wage rates, escalation rates, and other cost may be different for construction vs. long-term plant operation. Therefore, construction cost will be prepared in a separate estimate from the operation costs. Depending on the project scope, it is possible the A-E will be required to prepare three (3) separate estimates for each submittal. One of the vertical building construction, one for the HTRW construction, and one for plant operations.

9.12.1.1.3 The Civil Projects shall use the CIVIL WBS as provided by Savannah District. The CIVIL WBS provides the frame work for preparing cost estimates, modeling development, and collecting historical data for all civil projects. This CIVIL WBS is a hierarchial structure comprised of six levels: 1) Main Feature; 2) Sub-Feature; 3) Element; 4) Sub-Element; 5) Assembly Category; 6) Assembly, fallowed by the line item detail associated with each Assembly. The Feature, Sub-Feature, Element, and Sub-Element Titles are rigidly defined and shall not be changed. The Assembly Category and Assembly Titles are user defined and created. As a minimum, all estimates shall be prepared to the sixth title level followed by detail. The quantity take-off shall be prepared following the WBS to the same level. Levels five and six shall be created to further break down the work into Assembly Categories and Assemblies respectively. Six levels of titles shall always be created and Detail entered at level seven, even if titles are duplicate titles. Example:

LEVEL 01 07 Power Plant
LEVEL 02 03 Accessory Electrical Equipment
LEVEL 03 82 Conduit System
LEVEL 04 16 Electrical

LEVEL 05 01 {USER CREATED TITLE} Lighting & Branch Wiring
LEVEL 06 01 {USER CREATED TITLE} Plant Lighting Branch Circuits, LF
LEVEL 06 02 {USER CREATED TITLE} Plant Lighting Fixtures, LF
LEVEL 06 03 {USER CREATED TITLE} Plant Power Branch Circuits, LF

Assemblies for civil projects are often unique to the project and cost items in the Unit Price Database may not be adequate. Assemblies can be created in the project by using CREWS as Assemblies. See paragraph 6.6, page 6-29 of the MCACES Users Manual. Using Crews as Assemblies shall be entered at the Assembly Title, Level 6 of the project. Once a crew is pulled into the project as an assembly the members of the crew assembly may be adjusted by adding to or editing the individual members. Totally unique Crews shall be created as above by pulling individual labor and equipment members into the Crew Assembly directly from the Labor and Equipment Databases. Crew calculations showing how the productivity, cycle time, durations and all other calculations and assumptions use to develop the Crew shall be provided with each submittal. This information can be entered into the project electronic database or provided on back up sheets and referenced in the Assembly Title Notes. New titles for work not covered in title levels tow through four in the WBS may be added under numbers 90 through 99. Maintaining this rigid structure for the first four levels will allow systematic collection of historical CIVIL costs. Any vertical building construction required within the CIVIL project shall be a separate estimate from the civil work and shall follow the Military WBS. Depending on the project scope, it is possible the A-E will required to prepare two (2) separate estimates for each submittal. One for the vertical building construction and one for the Civil construction.

9.12.1.2 The quantity take-off and cost estimate shall be treated in a confidential manner and only those personnel concerned with the preparation and/or review of the project shall have access to it. The cost estimates will be utilized in preparing Government estimates for evaluating bids and shall become classified as "FOR OFFICIAL USE ONLY." Such material cannot be divulged to other than accredited Government personnel with a need to know. Information contained within estimates shall not be divulged to prospective bidders. Parametric measurement(s), such as lump sums, building cost by square feet of area, etc., for preliminary and final estimates are not permissible and estimates utilizing such will be rejected.

9.12.2 Requirements. The quantity take-off shall be prepared in accordance with the following instructions.

9.12.2.1 Prepare a quantity take-off following the appropriate Work Breakdown Structure (WBS) showing all quantities used in the estimate (see Quantity Take-Off Examples, EXHIBIT A-9-7). The A-E may prepare his quantity take-off on similar suitable forms. See EXHIBIT A-9-8, Quantity Take-Off Blank Forms. Blank forms are provided and may be copied for use by the A-E. Quantity take-offs shall not be written on the drawings themselves. The quantity take-off shall be prepared in a manner that is clearly legible,

indicating the calculations involved in determining the quantity and any assumptions the estimator has made in determining the quantity. The take-off shall contain back-up or supporting sheets showing breakdown for all quantities of all materials contained within the design drawings and/or specifications.

9.12.2.2 The top of each quantity take-off sheet shall contain the following information: 1) project information; 2) the design stage; 3) the plate number and/or specification number from which the quantity was derived; 4) facility name, quantity, and UOM; 5) WBS code where the quantity is located in the cost estimate; 6) the date and signature of the estimator who prepared them as well as the initials of the estimator who checked them.

9.12.2.3 The quantity take-off for each building and/or structure shall show quantities of materials to a line 5 feet outside the building line. Include site preparation and grading for the building area within this line. Make computations of earthwork quantities for site grading, roads, drives, etc., by the use of cross sections. Cross sections of earthwork quantities shall be prepared and submitted with the quantity take-off sheets at concept, preliminary and final design submittals. Copies of the cross sections shall be submitted with the concept and preliminary designs, while the originals will be submitted at the final design submittal.

9.12.2.4 The quantity take-off shall include, where applicable, doors and windows broken out by size and type. Hardware shall be broken out by number of sets. Within each set, the item and hardware number shall be listed. See EXHIBIT A-9-7.

9.12.2.5 Price quotations on all principal items of equipment (such as cranes, elevators, kitchen equipment, pumps, compressors, unit heaters, air conditioners, fans, etc.) and any specialty items (such as glazed acrylic canopies, metal pan ceilings, etc.) and on all other large dollar items in the estimate shall be submitted as part of the estimate backup. When the project is a Metric Design the A-E shall submit a list of all hard metric items. These price quotations shall include the name of manufacturer and the date, name, address, and phone number of the company supplying the quote. Price quotations shall contain the name of the company representative who supplied the quote and the time range for which the quote remains valid.

9.13 **WAGE RATES.**

9.13.1 Wage Rate Calculations. Wage rates to be used in preparing the construction cost estimate will be provided to the A-E by the Cost Engineering Branch, Savannah District. The AE shall review the rates provided for their project for any inaccuracy in reflecting the most current wage rate conditions and call Cost Engineering Branch, Savannah District to report any inaccuracy. The wage rate database provided reflects rates for a 40-hour construction week and does not take into consideration any abnormal circumstances such as working in secure areas, working in hazardous waste areas, or construction schedule

requiring overtime or shift work, etc. The A-E shall be responsible for addressing any abnormal circumstances required by the project and making corrections to the database rates provided, reference Chapters 5 and 6 of EI 01D010.

9.13.2 Estimate Submittal. Before each submittal the AE shall contact Cost Engineering Branch and request the most current labor rates for their project location. If the project requires the A-E to make changes to the Labor Database provided, the A-E shall use the copy command from the "SERVICES MENU" to copy the Labor Databases provided to a new Labor Database. The identification of the new Labor Database shall match the six-character code used for the project ID. The New Labor Database shall be edited to reflect required changes to wage rates. An explanation of changes to the Labor Database shall be entered in a separate paragraph of the PROJECT NOTES. A printed copy of the wage rates used in the project will accompany each estimate submittal. If a new Labor Database is created, it shall be saved when saving the project database to compressed floppy diskette.

9.14 **INDIRECT COSTS (OVERHEAD).**

9.14.1 Indirect Costs Categories. Indirect costs are divided into two categories, Field Overhead and Home Office Overhead (G & A). Each cost estimate requires an itemized breakdown of the job indirect costs considered necessary for the project.

9.14.2 Prime Contractor's Overhead. Itemized field overhead items for the prime Contractor shall be estimated in detail for all projects based on working knowledge of the project and the anticipated construction period. A Generic Itemized Overhead (contained in the project template) will be provided by the Cost Engineering Branch, Savannah District as a starting place for the A-E. The A-E shall edit this itemized overhead to fit the specific project. Items not applicable to this project shall be deleted and new items shall be added as required. See paragraph 9.17.6.3.3 for MCACES instructions. Use of past experience project overhead percentage is considered acceptable only for those estimates in concept design or earlier where items must be estimated by experienced unit prices. Home office costs are typically included in Government estimates as an average experienced percentage rate of the expected contract amount. It is important to understand that home office costs are not standard and fixed. The rate for a specific Contractor varies from period to period. It is a function of total home office costs divided by the total volume of business during a specific period. A reasonable average range of rates for estimating is from 2 percent for larger to 7 percent for smaller Contractors. The amount of G & A is computed by multiplying the selected percentage by the sum of the total direct cost plus field overhead. The Home Office Overhead shall be entered in the "Home Office Percent" field on the same entry screen.

9.14.3 Subcontractor's Field Overhead. A subcontractor's overhead usually bears a fairly stable relationship to the subcontractor's portion of the work and can be estimated on a percentage basis. However, detailing of subcontractor's overhead costs will be required

for those projects where subcontracted work has unique requirements or where the cost impact of the subcontracted item is 25 percent or more of the total project direct cost. These percentages shall be used to determine when itemized overhead on subcontracted work is required and in assigning the weighted guide line factors to the Contractor's profit.

9.14.4 Typical Field Overhead Items. Paragraph 10-2 of EI 01D010, lists typical items of indirect costs. This list is to be used as a guide for evaluating particular project requirements along with the Generic Itemized Overhead provided.

9.15 **PROFIT.** Allocation for Profit in Cost Estimates. The estimate will include allowances for prime Contractor's and subcontractor's profit. For the prime Contractor and all subcontractors the rates for profit shall be determined by the weighted guideline method. Chapter 11 " PROFIT" of EI 01D010 describes the weighted guideline method and it use. The applicable factors for use in preparing this form are shown as EXHIBIT A-9-6. The reason for the A-E selecting each factor shall be determined in the "Notes" of each Contractor.

9.16 **BOND.**

9.16.1 Allocation for Bond in Cost Estimates. The costs of performance and payment bonds will be included in the estimate. The rates shall be calculated using Class B bond. See paragraph 9.17.6.3 for setting instructions.

9.17 **SUBCONTRACT WORK.**

9.17.1 Use of Subcontractors In Cost Estimate. Estimates will be prepared for subcontractor work using the same methodology and degree of detail as outlined for the general Contractor. The cost of subcontracted work is the amount charged by the subcontractor for the work performed, including costs for direct labor, materials, equipment, and second tier subcontracts as well as his charges for overhead and profit.

9.17.2 Use of Subcontractor Quotations. <u>The Government Estimate will be prepared initially independent of subcontract quotations</u>. When subcontract quotations are obtained and validated, they may then be used to verify the reasonableness of the estimated subcontract work.

9.18 **TECHNICAL INSTRUCTIONS FOR MCACES ESTIMATES.**

9.18.1 Estimate Format. The format of all estimates shall follow the appropriate WBS (Military, HTRW, Civil) for the type estimate being created. (Reference paragraph 9.11.1.1.1 and 9.11.1.1.2.) The appropriate WBS will be provided by Savannah District. The WBS should be studied in detail by all persons preparing the quantity take-off and the estimate. The WBS drives the way the quantity take-off will be prepared. When the

project is a Metric Design the estimate shall be prepared using metric units of measure and the pricing representative of metric units of measurement. All software, project templates, and databases will be in metric and will be provided by Savannah District for use in preparing a metric estimate. Databases and Templates provided will have different ID's than referenced in this document, but will contain the same type information and estimate format, only in metric.

9.18.2 MCACES Software and Databases. The MCACES software and databases will be provided by Savannah District along with instructions for installing. All databases unique to Savannah District will have an ID that begin with the first three characters "SAS" (South Atlantic Savannah). The Models, Assembly, Crew, Equipment, and Unit Price Book Databases all begin with SAS identification and shall be used on all projects unless otherwise directed. All labor, equipment, and material cost provided in these databases are a pricing guide only. It is the A-E's responsibility to check and verify pricing used in his estimate. All databases are compressed to floppy diskettes and can be loaded from within the MCACES software using "Load From Compressed" on the SERVICE Menu. All floppies identified as databases shall be loaded into the \GOLD\DATA\ directories. All databases provided are FOR OFFICIAL USE ONLY and shall be protected accordingly.

NOTE: Load From Compressed - When using this command you are presented with a list of available databases to load for the Directory/Path you indicated. To select a database use the Up/Down Arrow keys to highlight the database you want to load and press the [Space Bar]. This will place a check mark to the left of the database. This can be repeated for any or all databases. After marking the databases you want loaded press the [Enter] key to start the process.

9.18.2.1 Labor Rates Databases. Labor databases for locations under Savannah District are provided on a Labor Rates floppy diskette. Select to load only the rates applicable to the project location. See paragraph 9.12 for information about labor rates and any required changes to rates. NOTE: Using the localized LABOR RATES database will put the correct labor and unit cost into the project. As the items of work are brought into the project database they are repriced with the currently selected LABOR, EQUIPMENT, and UPB (material only) databases. The labor and unit cost shown in the UPB, CREW, and ASSEMBLY databases will not show the same cost when brought into the project because these databases have not been repriced to the localized LABOR RATES database.

9.18.3 Templates and Sample Projects. Savannah District provides a Templates and Sample Projects floppy diskette containing compressed project templates and sample projects. This diskette contains Sample Projects to review the required format for the types of estimates prepared by the Corps of Engineers, (ie. Civil, Military, and Hazardous, Toxic, and Radioactive Waste). It also contains specific project Templates for each type of estimate. The appropriate project template shall be used to start the respective projects. All databases are compressed to floppy diskettes and can be loaded from within the

MCACES software using "Load From Compressed" on the SERVICE Menu. All floppies identified as Projects (Templates/Samples) shall be loaded into the \GOLD\PROJECT\ directories.

9.18.3.1 Military Templates. For Military Estimates the "SASMIL" Template shall be used to create the estimate format. Use "Load From Compressed" on the SERVICES Menu to load the "SASMIL SAS Military Project Template" into the \GOLD\PROJECT\ directory. After loading select "SASMIL" in the database window and highlight with the cursor. Use "Copy a Database" from the SERVICES Menu to copy this project template into a unique six-character project ID. The SASMIL template itself is not to be used for entering data. This template contains the proper format for creating the estimate, along with the WBS Titles, Project Information Records containing suggested Contractors and the beginning of an itemized Field Overhead for the prime Contractor AA. See EXHIBIT A-9-3, the Table of Contents Project "SAMPLE" for a condensed listing of the WBS. This listing should be copied and used as a guide by all persons preparing quantity take-offs and estimates. This listing shows only some of the type Assembly Titles that are in the Generic Models Database and indicates the type of detailed assemblies required in the estimate. See the Military WBS for definitions of required Assemblies or each Assembly Category. This printout, along with the Military WBS will help the Cost Engineer create the estimate in the required format.

9.18.3.1.1 Military Estimate Hierarchy. When creating a MCACES estimate it is important to recognize that the construction project consists of seven hierarchical levels, some coming from ENG Form 3086 and some from the Military WBS. They are defined as:

LEVEL 0 (Top Most Level)..PROJECT INFORMATION RECORD
LEVEL 1 .....PRIMARY/SUPPORT FACILITIES
LEVEL 2 .....INDIVIDUAL FACILITIES
LEVEL 3 .....SYSTEMS
LEVEL 4 .....SUBSYSTEMS
LEVEL 5 .....ASSEMBLY CATEGORIES
LEVEL 6 .....ASSEMBLY
LEVEL 7 .....DETAIL

9.18.3.1.2 Project Level (LEVEL 0). Indirect cost and owners cost are input at this level and distributed to the rest of the project. All cost of the Primary Facilities and Support Facilities are accumulated to obtain a total project cost. This shall include all construction contract cost as well as Government-furnished materials and items furnished through funds other than construction funds, ie. information systems.

9.17.3.1.3 Primary/Support Facilities (LEVEL 1). Divides the project into Primary Facilities, Support Facilities, Category E Equipment, and Government-Furnished Equipment

based on DD Form 1391 format for the project. Additives shall also be located at this level if required.

9.18.3.1.4 Individual Facilities (LEVEL 2). Individual Facilities under Primary Facilities will be all individual buildings identified by Category Codes in AR 415-28. Individual Facilities under the Support Facilities shall be the eight categories under Support Facilities of the DD Form 1391.

9.18.3.1.5 Systems (LEVEL 3). Under Primary Facilities the interior Military WBS System 01 through 15 and System 16 are titled at this level. If there are multiple Primary Facilities, each one shall be broken down by the 01 through 16 Systems. Under Support Facilities the Military WBS Systems 17 through 20 are broken down under the appropriate eight categories defined by DD Form 1391.

9.18.3.1.6 Subsystem (LEVEL 4). This level contains the Subsystem titles from the Military WBS for the above Systems. If there are subsystems in the project not identified by the Military WBS, they shall be identified using 90 through 99 under the appropriate System.

9.18.3.1.7 Assembly Category (LEVEL 5). This level contains the Assembly Category titles from the Military WBS for the Subsystems above. If there are Assembly Categories in the project not identified by the Military WBS, they shall be identified using 90 through 99 under the appropriate Subsystem.

9.18.3.1.8 Assemblies (LEVEL 6). Assembly Titles shall be created at this level following the definitions contained in the Military WBS. See the TRAINING ESTIMATE "CHAPEL," EXHIBIT A-9-9 for examples of required Assemblies.

9.18.3.1.9 Detail (LEVEL 7). Individual Cost Items are located at this lowest level in the estimate and reports at this level are referred to as the Detail Reports. These are the basic work tasks consisting of labor, equipment and material cost and is the same level of detail as that found in the Unit Price Book Database. Some of the basic work tasks can be modified by Modifiers from the UPB.

9.18.3.1.9.1 Modifiers are identified in the UPB Database and provide a method of adding or reducing, for optional quality or scope to the work task costs. Each modifier acts solely on the basic cost item it is assigned. Ref. R, Section 6.10, page 6-49, of the MCACES Software Manual, Volume I.

9.18.3.2 Civil and HTRW Templates.

9.18.3.2.1 For Civil and HTRW projects the "CIVTMP" Template shall be used to create the estimate format. Use "Load From Compressed" on the SERVICES Menu to load the

"CIVTMP Project Template" into the \GOLD\PROJECT\ directory. After loading select "CIVTMP" in the database window and highlight with the cursor. With the "CIVTMP" highlighted in the database window press [F2] ADD ITEM to create a project database for your project. Enter a unique six-character project ID and project title. Pressing [F10] EXIT will save this information and create the project database. Make sure this new project database is selected and shows in the database window. The "SASCIV" template itself is not to be used for entering data. This template contains the proper format for creating the estimate. The WBS Titles associated with your specific project shall be copied from the appropriate Civil Models Database.

9.18.3.2.2 For HTRW project the "SASHTW" Template shall be used to create the estimate format. Use "Load From Compressed" on the SERVICES Menu to load the "SASHTW" Project Template" into the \G530\PROJECT\ directory. After loading select "SASHTW" in the database window and highlight with the cursor. With the "SASHTW" highlighted use "Copy a Database" from the SERVICES Menu to copy this project template into a unique six-character project ID. When the coping is complete press [F8] to Select the new project database and make sure it shows in the database window. The "SASHTW" template itself is not to be used for entering data. This template contains the proper format for creating the estimate, along with the WBS Titles, Project Information Records containing suggested Contractors and the beginning of an itemized Field Overhead for the Prime Contractor AA. See the HTRW WBS for definitions of required Assembly Category and Assembly Titles.

9.18.3.3 Sample Projects. For military project examples there is a project identified as "CHAPEL," which can be loaded from the SERVICES Menu using "Load From Compressed." When Load From Compressed is complete press "Y" to select. This project demonstrates the required estimate format breakdown that the A-E shall produce in their project.

9.18.4 Supplemental Databases. This diskette contains a Generic Models Database created by Savannah District. Models Databases contain the generic type assembles. Some of these assemblies may be applicable to your project and may be pulled into your estimate. Some of these assemblies may be close to your requirements and may be copied to a new assembly ID and edited to create a new assembly to be used in your project. The Models Database ID begin with the first three characters SAS. All databases are compressed to floppy diskettes and can be loaded from within the MCACES software using "Load From Compressed" on the SERVICE Menu into the \G530\DATA\ directories.

9.18.5 Required Services. The A-E shall supply the following Cost Engineering services.

9.18.5.1 The overall project shall be analyzed by all disciplines involved in preparing the cost estimate to consider the following procedure before making the detailed quantity

take-off. This shall be done before preparing the concept estimate as it will dictate the final estimate format needed in the preparation of the quantity take-off.

9.18.5.1.1 Review the drawings and DD Form 1391 for the project to determine the number of Facilities within the Primary Facilities required in the project. Should the DD Form 1391 contain vertical buildings that can be identified by AR 415-28 Category Codes (no matter how small) in Support Facilities, the A-E shall put these buildings under Primary Facilities in his estimate. When multiple buildings are involved make each building as a separate Facility under the Primary Facilities. (Example: Tactical Equipment Shop which has POL, Storage, and Sentry Buildings). When multiple buildings are being constructed at different sites the A-E shall prepare a separate facility for each building in the Primary Facility and separate Supporting Facilities for each building site. The A-E shall prepare a proposed Bidding Schedule based on the Facility (Level 2) of the Primary Facility and the Support Facilities (Level 1) for Site Work.

9.18.5.1.2 When the number of buildings have been defined in the Primary Facility, each of the buildings shall follow the WBS of defined Systems, Subsystems, Assembly Categories, and Assemblies. The Site Work shall follow the ENG 3086 and WBS format. See EXHIBIT A-9-3 "Table of Contents" SAMPLE Project. The Detail Quantity Take-off shall follow this same format.

9.18.5.1.3 When projects are funded by more than one funding source, all work related to each funding source shall be segregated respectively. Funding sources shall be identified separately at level 1 in the MCACES estimate and shall be identified separately on the Proposed Bidding Schedule. All work associated with each funding source shall be so identified on the plans and/or specifications.

9.18.5.1.4 For Army projects, all Information Systems that are funded by OPA shall be a separate Bid Item in accordance with Draft AR 415-15 provided in other documents. These systems shall be identified as specified in paragraph 9.17.5.1.3 above. This is not required for Air Force Projects.

9.18.5.1.5 If the cost estimate is to be prepared by more than one person on more than one computer and then merged into one Prime Estimate, follow the steps in EXHIBIT A-9-14, MERGING MULTIPLE PROJECT DATABASES CHECKLIST. Failing to follow these steps may result in cost date having to be re-entered to correct the corrupted database. It is very important to understand that the Merge and Extract only work correctly when the format of the databases are exactly the same.

9.18.6 Starting the MCACES Project. All program software and databases should be installed as described above. Activate the MCACES software following instructions from the MCACES Software Manual. Before starting the project ensure that the appropriate

Project Templates and Databases are selected in the DATABASE WINDOW. Reference EXHIBIT A-9-4 "CREATE A NEW PROJECT CHECKLIST."

9.18.6.1 Military WBS Projects. For Military WBS Projects the SASMIL Template shall be selected and shown in the DATABASE WINDOW. If it is not currently selected, use [F8] SELECT and highlight with the cursor and select. The Models, Assemblies, Unit Prices, Crews, and Equipment Databases selected shall begin with "SAS" in the first three characters. The Labor Database shall be the database for the project location.

9.17.6.1.1 With the SASMIL project template selected and highlighted use "Copy a Database" from the SERVICES Menu and copy this database to a unique six-character identification code assigned by the A-E. This will duplicate the information contained in SASMIL to your new project. Select the new project using [F8] SELECT. The new Project ID shall now be in the DATABASE WINDOW.

9.18.6.1.2 With the new project highlighted press [F4] EDIT and enter the official descriptive project title. Press [F10] EXIT to save.

9.18.6.1.3 From the REPORTS Menu choose Edit Report Title Page. Enter the appropriate information as shown on the screen. Use Project Notes [F7] to describe the overall general scope of the project. See project CHAPEL for Project Notes. Press [F10] to save.

9.18.6.2 Work on Project. Highlight the new project and press [Enter] to work on the project. The first item listed is the Project Information Record. With the Project Information Record highlighted press [F4] EDIT and enter the category Code for the project from the DD Form 1391. Press [F4] to toggle out of EDIT and save the record.

9.18.6.3 Prime Contractor. Choose to work on Project Information Records by highlighting the item and pressing [Enter]. The prime Contractor record is displayed. Edit the prime Contractor by pressing [F4] EDIT. The Field OH shall be set to "C" to calculate. Home Office shall be set to P (Percent) and should be between 2 and 7 percent as described in paragraph 9.13.2 of this chapter. Profit shall be set to "C" and Bond shall be set to "C."

9.18.6.3.1 OTHER Screen - The last line on the screen (the Status Line) indicates that an Other Screen is attached to this screen by the prompt "OTHER." Choose the OTHER screen by pressing [Shift] [F7] or using the [F9] MENU ADD/EDIT. This brings forward the attached prime Contractor Window. The Profit Weighted Guideline method of determining profit shall be used for the prime Contractor and all subcontractors. Each Risk Factor field is HELP [F1] sensitive. By pressing [F1] HELP a description of the appropriate weight to apply to the project will be presented. Each Risk Factor shall be filled in based on the project cost, duration, complexity, and Contractor risks. After selecting the correct risk factors press [F7] NOTES and type in the selected factor and reason for selecting each

factor in the "Profit Weighted Guideline Note" screen. See Training Estimate, "CHAPEL," EXHIBIT A-9-9 for example.

9.18.6.3.2 The Bond Class Field shall be set to "B." This will cause the software to automatically calculate the Bond Percentage used in the estimate. (Reference Figure 7.2 and Figure 7.3 in the MCACES Software Manual, Vol. I.) Press [F10] twice to save information on the prime Contractor.

9.18.6.3.3 With the prime Contractor Record highlighted press [ENTER] to work on the Itemized Field Overhead and Subcontractors. A list screen appears showing record 0 as the Itemized Overhead followed by a long list of typical subcontractor. Choose the Contractor's Overhead by pressing [Enter] to get a list of typical itemized Field Overhead for the prime Contractor. This list is provided only as a guide. The A-E shall add/delete items, edit quantities and adjust cost to represent a detailed itemized Field Overhead for this project. Pressing [F10] upon completion will save the data. See paragraph 9.13.2 for explanation.

9.18.6.4 Subcontractors. Now highlight the subcontractors and [F4] EDIT them. The subcontractors' profit shall be calculated by the Profit Weighted Guideline for the "OTHER" window as was done for the prime Contractor. Any subcontractors not used in the estimate shall be deleted. In order for Contractors to be used in the estimate they must be assigned at the appropriate level within the Primary/Support Facilities. This will be discussed in detail later. [F10] EXIT until you are back at the Project Information Record.

9.18.6.5 Primary Facilities Title. Highlight the Primary Facility Title and [F4] EDIT. On the Primary Facility Edit Screen the quantity shall be 1 LS (Lump Sum). Usually the prime Contractor ID "AA" is enter on this screen as he is usually the prime on all Facilities under Primary Facilities. The Contractor Override Field shall be set to "NO" and the Project Category Code Q (from DD Form 1391) is typed into the Category Code Field.

9.18.6.6 Facility Titles. Highlight the Primary Facility and press [Enter] to the default FACILITY "Building One." Create the number of Primary Facilities that was determined from paragraph 9.17.5 above. To create another Facility highlight FACILITY "Building One." MARK this item by pressing [Shift] [F9] or using the [F9] FUNCTION Menu - MARK. This places a check mark to the left of the title. Exit up a level [F10] and choose COPY from the FUNCTION MENU - MARK or press [Shift] [F4]. This brings up a window allowing you to copy "AA.01. Building One" to a new location. Change the default AA.01 to AA.02 and press [Enter] to complete the copy. Now there are two identical Facilities under the Primary Facilities. Continue this process for all Primary Facilities in the project. After creating all of the Facilities, [F4] EDIT each FACILITY TITLE and type in the name of the Facility, and Gross Square Feet of the Building as the Facility Quantity and UOM. If the prime Contractor was defined on the PRIMARY FACILITIES TITLE leave the Contractor Field blank. After editing the first facility pressing [PgDn] takes you to the next facility to edit.

9.18.6.7 System Titles. With the FACILITY TITLE highlighted press [Enter] to go to Systems. The 01-15 System Titles and Selective Demolition System 16 are predefined and the titles shall not be changed. Each title shall be edited to enter the appropriate quantity as defined in the WBS. Reference the hard copy of the WBS for the correct definition of the UOM and quantity. Do not use the square feet area of the building as the quantity at the Systems Level. Use the appropriate UOM as defined in the WBS. Any SYSTEM TITLE not used in the project shall be deleted. Sometimes subcontractors can be identified at the Systems Title level as all work performed in the system is normally accomplished by one Contractor. For example System 11 - Electric Power and Lighting is normally installed by the Electrical Contractor "EL."

9.18.6.8 Subsystem Titles. With the SYSTEM TITLE highlighted press [Enter] to go to Subsystems. The Subsystem Titles are predefined and the titles shall not be changed. Each title shall be edited to enter the appropriate quantity as defined in the WBS. Reference the hard copy of the WBS for the correct definition of the UOM and quantity. When there are Subsystems in the project which are not defined in the WBS the A-E shall create them using 90 to 99 Identification code. Any SUBSYSTEM TITLE not used in the project shall be deleted. Subcontractors can be identified at the Subsystem Title level if all work performed in the subsystem is normally accomplished by one Contractor.

9.18.6.9 Assembly Category Titles. With the SUBSYSTEM TITLE highlighted press [Enter] to go to Assembly Categories. The Assembly Category Titles are predefined and the titles shall not be changed. Each title shall be edited to enter the appropriate quantity as defined in the WBS. Reference the hard copy of the WBS for the correct definition of the UOM and quantity. When there are Assembly Categories in the project which are not defined in the WBS the A-E shall create them using 90 to 99 Identification code. Any ASSEMBLY CATEGORY TITLE not used in this project shall be deleted. Sometimes subcontractors can be identified at the Assembly Category Title level as all work performed in the category is

normally accomplished by one Contractor. For example System 06 - Interior Finishes; Subsystem 01 - Wall Finishes; Assembly Category 03 - Gypsum Wallboard Finishes is normally installed by GW-Contractor and Assembly Category 04 - Tile and Terrazzo Wall Finishes is normally installed by TE-Contractor.

9.18.6.9.1 When Assemblies can be used multiple times within the project it is beneficial to the estimator to create the Assembly in the MODEL's DATABASE rather than in the project. Assemblies from the MODEL's DATABASE can be copied into the project as often as required. The A-E shall copy the SAS Generic Models Database using Copy a Database from the SERVICES Menu to the same six characters as was use to name the project. Select this new Model's Database and use it to create new assemblies. This new Models Database shall be submitted along with the project database with each submittal. Make a list (hand written or typed) of the Assembly ID and description of the newly created Assemblies and submit with the Final Estimate Submittal. See EXHIBIT A-9-1.

9.18.6.10 Assembly Titles. The project template contains no Assembly Titles. The A-E shall create the Assembly Titles based on the requirements of the project. Reference the sample project "CHAPEL" for examples of the required Assembly breakdown to be provided. The WBS provides a description of detailed items found in the assemblies. Also ref. EXHIBIT A-9-3 "Table of Contents" Sample Project.

9.18.6.10.1 CREATE an ASSEMBLY TITLE. Highlight the appropriate ASSEMBLY CATEGORY and from the FUNCTION MENU "ADD/EDIT" choose "Add Subtitle" or press [Shift] [F3]. This will put you in the Add Subtitle Mode where you must enter a two-character Assembly ID. This ID will normally be 01-99 but alpha characters may be used if required. You are now ready to look for an existing assembly or create a new assembly.

9.18.6.10.2 LOOKUP an ASSEMBLY. Press [F6] LOOKUP and choose "Models" to look into the Models Database for available Assemblies that may exist. See paragraph 9.17.4. If an appropriate Assembly is located in the Models Database it can be copied into the project by highlighting the Assembly Title and pressing [F6] LOOKUP. You will be prompted to "Confirm LookUp" and by pressing [Enter] will accept what was looked up. You will then be prompted to "OMIT detail (Y/N)? N." with NO being the default. Press [Enter] to receive detail. With LookUp completed you will have the Assembly Title and Detail Items making up the assembly in your project. Press [F10] to exit Add and press [Enter] to select the Assembly and view the Detail List screen. If the detail items have the letter "P" to the Left of the Quantity in the Quantity field, the detail items have been linked to the "Parent Quantity," the Assembly Title in this case. You will not be able to edit the quantity in Detail List if the item is linked. You have to edit the Assembly Title and enter the correct assembly quantity which will then adjust the detail quantities.

NOTE: Some of the Assemblies are not linked and the assembly quantity will not adjust the detail. This is the case when there is not a direct correlation between assembly

quantity and detail quantity. In the "SAS Generic Models Database" provided with the software the Assembly Titles have been marked to identify whether the assembly is partially linked versus totally linked. See "READ ME FIRST" notes in the SAS Generic Models Database and examine the assembly titles under Support Facilities; Water, Sewer and Gas (_B.02.19.01.02) as an example. The # symbol at the end of an Assembly Description indicates that there are Detail Cost Items contained in the assembly that are not linked to the Assembly Quantity. The user will have to edit the detail item and enter the appropriate quantity in addition to entering the Assembly Quantity. If the Assembly Title Description does not contain a # symbol, the detail items are linked to the Assembly Quantity and the user must enter the appropriate Assembly Quantity. The Detail Item's quantity will automatically be adjusted. When this is the case there will not be a "P" in the detail quantity field and the detail quantity can not be edited.

9.18.6.10.3 CREATING an ASSEMBLY. If there is not an assembly already created that reflects the assembly needed for the project, then the A-E shall create the assembly from detail items in the Unit Price Database. Locate the correct ASSEMBLY CATEGORY TITLE and Add Subtitle [Shift] [F3]. This puts you in the Assembly Add Screen where you enter the Assembly ID, Title, Quantity an Assembly Unit of Measure. Reference WBS for UOM's. Press [F10] to save. Choose to work on the newly created Assembly Title by pressing [Shift] [F5] ADD DETAIL. Reference paragraph 6.2, page 6-9 of the MCACES Software Manual. On the Cost Item Entry Screen the first two fields of the "Project Sequence/Database" ID requires no entry. Position the curser to the third field and press [F6] LOOKUP and choose to look up into Unit Price [Shift] [F6]. The software will place you at the top of the Unit Price Database. Detail items can be marked by pressing [Shift] [F9] MARK or by pressing [TAB] to move to the Quantity Field. Entering a quantity other than zero will also mark the item. Entering a zero will un-mark the item. After selecting or marking the detail items needed in the assembly press [F6] and then confirm lookup. This will return all detail items marked to your project. Press [F10] to exit Add Detail and save the items. Now check that all detail quantities are correct for your project by editing each item or, if appropriate, you can link the detail items to the Assembly quantity. Paragraphs 9.17.6.1.9 through 9.17.6.1.11 shall be repeated for all Facilities under Primary Facilities.

NOTE: One must be located at DETAIL in the UPB when copying multiple detail items into the project, i.e. pressing [F6] to complete lookup. If [F6] is pressed while located at a title level, only the last marked item will be copied into the project. "EDIT ITEM" only allows one to replace a detail item with another item from the UPB.

9.18.6.11 Support Facilities Title. In most projects there is only one set of Support Facilities (all Primary Facilities are constructed on the same site). When there is only one set of Support Facilities this title record needs only to be edited to identify the prime Contractor.

9.18.6.12 Adding Additional Support Facilities. Occasionally there are projects that contain multiple Primary Facilities on more than one site. When this happens the Support Facilities Titles and WBS structure shall be duplicated in a Second Support Facilities Title. Highlight the Support Facility and "MARK" the title by pressing [Shift] [F9] or selecting "MARK" from the pull down MARK MENU. After marking the Support facility, arrow up to the "Project Information Record" and press [Shift] [F4] or "COPY" from the MARK MENU to copy to a new location. The screen will prompt to Copy From "BA" to "BA". Change the copy to ID from "BA" to an unused ID i.e. "FA", etc. Edit both Support Facilities and change the Description to reflect the respective sites and identify the Prime Contractor. This shall be repeated for each separate site location.

9.18.7 Print Selected Reports. The following procedures shall be required by the A-E when creating the required printed reports for all submittals. Ref. EXHIBIT A-9-11 "PRINT SUBMITTAL REPORTS CHECKLIST." The Unit Price Database can also be printed for those who may want a hard copy. Reference EXHIBIT A-9-15 "PRINTING THE UNIT PRICE DATABASE AND OTHER DATABASES", for printing instructions.

9.18.7.1 PACK A DATABASE. When making an estimate submittal to Savannah District the project database shall be packed to permanently erase deleted records from the project. From the SERVICES Menu choose Pack a Database while the project is highlighted in the Database Window.

9.18.7.2 SELECT REQUIRED REPORTS. See EXHIBIT A-9-11 for MCACES Detail Report Format and Report Selections for all Submittals to Savannah District.

9.18.7.3 Printer Setup. The printer shall be set up to print in Landscape mode with 172 characters per line and 66 lines per page.

9.18.7.4 Activate Reports Generator. From the REPORTS Menu choose Print Selected Reports. Type in the estimate design status (Concept, Final, etc.) in the Report Title Field, see CHAPEL Estimate for example title.

9.18.7.4.1 Send Reports to Printer. When sending the Reports directly to the printer as they are created enter PRN in the Printer Device Field and press [PgDn] to activate writing the reports.

9.18.7.4.2 Send Reports to File. If you want to send the Reports to a file and print at a later time or view the reports before printing, type in a filename.txt in the Printer Device Field and press [PgDn]. This writes the reports to the file and the file can be printed later using the DOS Print command.

9.18.7.3.3 Viewing a Reports File. If the reports were written to a file, the file may be viewed using View Reports with Viewer from the REPORTS Menu.

9.18.8 Save to Compressed. After generating and printing the required submittal reports the databases shall be Saved to Compressed to floppy diskettes, placed in an envelope, stapled to the printed estimate and submitted along with the printed estimate.

9.18.8.1 Compress Project Database. The project database shall always be Saved to Compressed. A formatted floppy diskette is required to complete this process. Highlight the Project in the Database Window. From the SERVICES Menu choose Save to Compressed and enter the Project ID. When prompted to "Save Related Databases along with Project?" respond "N" for No. When the
compression process is complete save to the floppy.

9.18.8.2 Compress Assembly and/or Models Databases. If new items were created in the Models or Assembly Databases (reference paragraph 9.17.6.9), those databases shall be Saved to Compressed along with the project for the Final Submittal only. To Save to Compressed the Models Database highlight and use Save to Compressed. When prompted with the path of the databases press [Enter] and a list of available databases will be presented. Use the up/down arrow to locate the database/s you want to compress and press the [Space Bar] to put a "Check Mark" by that database. When all databases have been marked press [Enter] to start the compression process. With the compression process complete save to floppy. The compressed Project is displayed with a check mark to the left of the ID in the "Keep Database Window." Press [Enter] to keep the project and also save the compressed Assembly or Models to the same floppy diskette. The next prompt will be "Diskette is NOT BLANK, Delete All Non-Database Files?" Respond "Y" for yes. This will save both the project and other databases to compressed floppy diskette.

9.18.8.3 Compress Labor Database. If new rates are created in the Labor Database (Reference paragraph 9.12.2), the database shall be saved to compressed along with the project. Follow the same procedure as in paragraph 9.17.8.2.

9.18.8.4 Floppy Diskette Labels. The following information shall be recorded on all floppy diskettes submitted to Savannah District.

Project Identification Code (6 character code, para. 9.17.1.1) and the design status, ie. "CHAPEL 60 Percent Estimate".

Project Title

FY-XX LI-XXXXXXX

Location

LOAD from Compressed 1 of ?

9.19 **REPORT OF COST AND BUILDING/STRUCTURE ANALYSIS**.

9.19.1 General. The "Report of Cost and Building/Structure" are used by CESAS-EN-C to prepare cost guidelines for future projects. These reports are to be furnished as a part of the Final A-E Cost Submittal. A revised report shall be submitted with the Corrected Final Submittal if any scope changes are made after the Final Submittal. Reference EXHIBIT A-9-12 for Forms.

9.19.2 Requirements. The following instructions identify the items of work that require cost reports:

9.19.2.1 Buildings. (All applicable construction Category Codes) Reports shall be submitted for all new buildings funded by appropriated or nonappropriated funds. Reports shall be furnished for additions to existing buildings, but only when the estimated contract cost of the addition exceeds $50,000.00. To the degree practical, reports for additions shall exclude the estimated cost of repairs and alterations in the existing building.

9.19.2.2 Liquid-Fuel Dispensing and/or Storage Facilities. (Construction Category Codes 120 and 410). Reports shall be submitted for all liquid-fuel dispensing and/or storage projects where the estimated contract cost exceeds $50,000.00.

9.19.2.3 Paving. (Construction Category Codes 110 and 850) Reports shall be submitted for all paving projects where the quantity of paving of any one type specified exceeds 5,000 square yards. Separate reports are required for flexible pavement or rigid pavement where the quantity of either exceeds 5,000 square yards.

9.20 **CONTRACT-MODIFICATION ESTIMATES**.

9.20.1 General. In certain cases the A-E will be required to prepare estimates for construction contract modifications. These estimates are used as a basis of negotiations with Contractors for additions to or deletions from a project, or both, and shall be prepared in accordance with instructions of this chapter for Government Estimates.

9.20.2 Requirements. Modification estimates shall be prepared in accordance with the following instructions.

9.20.2.1 The modification estimate shall be generated by MCACES.

9.20.2.2 A complete and detailed quantity take-off and accompanying cost estimate shall be submitted with the modification package. The quantity take-off and cost estimate shall be an accurate representation of the proposed modification as submitted.

9.20.2.3 EXHIBIT A-9-13 shows an example of a typed modification summary format. This summary estimate shall be prepared for all modification packages. The typed summary format shall show estimated contract cost of all work deleted from the construction contract by this modification as well as all work being added by this modification.

9.20.2.4 The estimated additional construction time, in calendar days, required as a result of this modification shall be shown on the typed summary sheet.

9.20.2.5 The quantity take-off shall contain backup or supporting sheets showing breakdowns for all quantities of all materials being deleted from and/or added to the construction contract drawings and/or specifications. The quantity take-off shall be prepared in the same detail as required for the final cost estimate, including cross sections for earthwork quantities, equipment and material quotes, etc.

9.20.2.6 In addition to the quantity takeoff the A-E shall submit a list of the principal items of equipment as described in paragraph 9.7.2.3 of this chapter.

9.20.2.7 The A-E shall prepare a detailed overhead and profit sheet as described in paragraphs 9.12 and 9.13 of this chapter. The A-E shall prepare these sheets, to the degree practicable, to match the conditions of the Contractor constructing the project.

9.20.2.8 The following additional Government-furnished items will be supplied to the A-E whenever he is instructed to prepare a modification package.

9.20.2.8.1 EP 1110-1-8, Construction Equipment Ownership and Operating Expense Schedule-Region III, current issue.

9.20.2.8.2 The A-E shall receive the actual labor rates being used by the Contractor as well as all of the Contractor's equipment on the project site and their applicable rental and/or ownership rates from CESAS-EN-EM (Savannah District Engineering Management and Support Section). This information shall be used by the A-E in preparation of the modification estimate. If the actual labor rates are not readily available, the A-E shall be furnished the latest Davis-Bacon wage rates for the project location. If equipment rental/ownership information is not available, the A-E shall use the equipment rates contained in EP 1110-1-8, Construction Equipment Ownership and Operating Expense Schedule-Region III, current date. The labor and equipment rates used by the A-E in preparation of the modification estimate will be submitted as part of the estimate backup data.

9.20.2.9 Audit reports and results from previous modifications on this specific project to be used in adjusting labor productivity and material pricing will be furnished by the project manager.

9.20.2.10 The A-E shall submit a checklist, see EXHIBIT A-9-1, to be used as a coversheet with each modification estimate submittal.

9.20.2.11 The official Government Estimate will be prepared by CESAS-EN-C.

CHAPTER A-9

COST ESTIMATES

EXHIBITS

A-9-1 COST ESTIMATE SUBMITTAL CHECKLIST

A-9-2 CURRENT WORKING ESTIMATE SIGNATURE SHEET

A-9-3 TABLE OF CONTENTS PROJECT "SAMPLE"

A-9-4 CREATE A NEW PROJECT CHECKLIST

A-9-5 TYPED SUMMARY ESTIMATE EXAMPLE

A-9-6 PROFIT FACTORS

A-9-7 QUANTITY TAKE-OFF EXAMPLES

A-9-8 QUANTITY TAKE-OFF BLANK FORMS

A-9-9 TRAINING ESTIMATE, "CHAPEL"

A-9-10 PROPOSED BIDDING SCHEDULE

A-9-11 PRINT SUBMITTAL REPORTS CHECKLIST

A-9-12 REPORT OF COST AND BUILDING/STRUCTURAL ANALYSIS

A-9-13 MODIFICATION ESTIMATE SUMMARY SHEET

A-9-14 MERGING MULTIPLE PROJECT DATABASES CHECKLIST

A-9-15 PRINTING THE UNIT PRICE DATABASE AND OTHER DATABASES

A-9-16 SAMPLE CONCEPT/DESIGN BUILD ESTIMATE

A-9-17 A-E CONTRACT SUBMITTAL REGISTRY

COST ESTIMATE SUBMITTAL CHECKLIST

PROJECT:
LINE ITEM: FISCAL YEAR:
BASE: LOCATION:

*	[ ]	Current Working Estimate Signature Sheet
*	[ ]	Typed Summary Format
*	[ ]	Complied with "Create A New Project Checklist" EXHIBIT A-9-4
*	[ ]	Construction Cost Estimate Generated on "MCACES" following WBS format
*	[ ]	FLOPPY DISKETTES containing the project database and saved to compressed, placed in envelope and stapled to the estimate
	[ ]	FLOPPY DISKETTE containing the NEW databases (Models, Assemblies, Labor) if A-E added new data. Use save to compressed ref. paragraphs 9.17.8.2 and 3 (Final Estimate Only)
	[ ]	Assembly Listing of newly created assemblies, see Para 9.17.6.9.1 (Final Estimate Only)
*	[ ]	Quantity Take-off Sheets
	[ ]	Plan of Construction (Final Estimate Only)
	[ ]	List of principal items of equipment and price quotations (Final Estimate Only)
*	[ ]	Prime Field Overhead Itemized in the MCACES Project Estimate. Prime and subcontractors profit calculated by the weighted guidelines method in MCACES and notes added to each explaining factors used.
*	[ ]	Proposed Bidding Schedule
*	[ ]	Written Narrative When CWE exceeds Programmed Amount or Present Estimate is Greater than 5% of Previous Estimate
	[ ]	Report of Cost and Building/Structural Analysis (Final Estimate Only) Exhibit A-9-12
*	[ ]	Annotated Review Comments
	[ ]	Modification Typed Summary Format Modification Only)
	[ ]	Equipment Rates (Modifications Only)

TYPE OF ESTIMATE:
[ ] Concept [ ] Preliminary [ ] Final [ ] Corrected Final [ ] Other:

* INDICATES ITEM IS REQUIRED ON ALL SUBMITTALS.

CHAPTER A-10

DRAWINGS

INDEX

10.1 GENERAL
10.1.1 Purpose and Scope

10.2 APPLICABLE PUBLICATIONS

10.3 COMPUTER AIDED DESIGN AND DRAFTING (CADD)

10.4 CONCEPT/EARLY PRELIMINARY (30 PERCENT), (60 PERCENT), CODE 3 AND DESIGN/BUILD RFP SUBMITTAL REQUIREMENTS

10.5 FINAL (100 PERCENT) DESIGN SUBMITTAL REQUIREMENTS

10.6 CORRECTED FINAL DESIGN SUBMITTAL REQUIREMENTS
10.6.1 Notice
10.6.2 General

10.7 MATERIAL
10.7.1 Drawing Media
10.7.2 Other Media
10.7.3 General Requirements
10.7.4 Intermediate Reproduction Processes

10.8 DRAWING PREPARATION
10.8.1 Drafting Standards
10.8.2 Half-size Reduction
10.8.3 Multicolor Printing
10.8.4 Drawings Incorporating Photographs
10.8.5 Line Weights
10.8.6 Text

10.9 DRAWING FORM
10.9.1 General
10.9.2 Title Blocks
10.9.3 Numbering System
10.9.4 Site Adapted Drawings
10.9.5 For-Information-Only Drawings

10.10 DRAWING CHECKLIST

10.11 DRAWING REVISIONS
10.11.1 Amendment Drawings
10.11.2 Modification Drawings

10.12 SPECIFIC INSTRUCTIONS

EXHIBITS

CHAPTER A-10

DRAWINGS

10.1 GENERAL.

10.1.1 Purpose and Scope. This chapter sets forth criteria and standards to enable designers and drafters to prepare a clear, uniform set of design drawings and illustrations. Unless specifically noted in the A-E's scope of work, the standards for drawing presentation contained in this chapter shall be used in the preparation of all drawings required in a contract. Drawings shall be prepared with the expectation that the construction contractor - with the Corps of Engineers acting in the role as supervisor/inspector - will be able to construct the facility without any additional assistance and/or without the necessity for modifications to correct design deficiencies. Drawing submittals shall also be detailed to the extent that an accurate cost estimate can be prepared and shop drawings can be checked. Special consideration has also been given to the reproduction processes, plotting equipment, and techniques which will be used in subsequent operations.

10.2 **APPLICABLE PUBLICATIONS**. The publications listed below, hereinafter referred to by basic designation only, shall be used when preparing drawings. In each case, the most current edition existing at the beginning of the design shall be used.

DP 1110-1-1 (March 1997) Savannah District Drafting Standards

Tri-Service CADD /standards Release 1.8. Available on Internet at http://tsc.wes.army.mil/

These publications clearly delineate drawing requirements for military drawings consistent with the basic guide criteria, ER 1110-345-700, Design Analysis, Drawings and Specifications.

10.3 COMPUTER AIDED DESIGN AND DRAFTING (CADD).

10.3.1 The following CADD file requirements will apply:

a. The design drawing files shall be created using guidance provided herein. The generic details provided by Technical Report CADD-93-1 should be used as much as practicable. The purpose of this manual is to set forth standards which will provide the Corps with a consistent and compatible platform for CADD system use throughout the Corps. The establishment of a uniform CADD platform will provide a means for rapid and accurate transfer and integration of virtually all project-related information throughout the life cycle of any building project or facility master plan. Savannah District, along with most other COE districts, has chosen to make Intergraph MicroStation and related products, the CADD system of record. All translations from other systems to assure compatibility must be the task of the A-E firm and not of Savannah District personnel.

b. As a **minimum** each drawing in a design shall have an electronic file copy. Only **one** drawing should occupy a design file. With very few exceptions, all drawings will be created such that they can be plotted black and white. Color drawings will only be used in rare renovations projects.

c. A key plan should be displayed on each design file that depicts topographic information or plans that are broken due to size and scale.

d. The **final design files** should be saved with the composite drawing (drawing as it is to be plotted) in View 8, the title block in View 4. Additionally, if color is used for plotting, the color overlay in View 5 and the basic in View 2.

e. All reference files are to be attached without drive or directories (no paths).

f. The design file naming convention is an alpha/numeric **8** digit file name for design files. For CAL files, we must have the file named for the numeric sheet number of the drawing. (Example 001.cal, 002.cal ... 123.cal.) See Appendix A for a complete file naming convention for all disciplines.

The **CADD file name** should be displayed within the title block in the space between the "scale" and the "sheet" in English title block.

g. A CADD drawing level assignment table Design File Level Scheme sheet (Exhibit A-10-3) must be completed for each file.

10.3.2 The particular requirements of the computer graphic deliverables are itemized as follows:

a. As a minimum each drawing represented in a design should have an electronic file copy. This electronic copy must be readily accessible by the technical staff of Savannah District. The acceptable file format standard is Intergraph (.DGN). However, for sample projects (i.e. Air Force) the Customer may ask for Autocad (.DWG) file format. Follow the instructions in your particular contract. Any supporting files, cell and font libraries must also be furnished to the Savannah District with the design files.

b. A text listing of the file name, plate no., and drawing title should be submitted in hard copy form. The electronic media used for delivery should be:

(1) 3-1/2" MS-DOS high density disk (.DGN, .DXF, or .ZIP files). **No more than 5 disks. You can use Dos PKZIP utility or WINZIP utility. Do NOT use MS DOS Backkup or Windows backup utility.**

(2) CD-ROM created with a drive adhering to **ISO 9660**. Disk capacity of 650MB.

(3) You may also use IomegaZip 100 disks to transmit date, formatted for IBM compatibles. Capacity 100MB

10.3.3 The A-E shall comply with the following standards.

a. A/E/C CADD Standards Jul 98, from Tri-Service CADD GIS Technology Center

b. SAVANNAH DISTRICT DRAFTING STANDARDS dated 1 March 1997 (this manual was prepared for manual drafting practices - generally most of the information is also pertinent for CADD generated files).

c. Technical Report CADD-93-1 CADD Details Library Tri-Service CADD/GIS Technology Center dated April 1995.

10.3.4. Questions concerning CADD, filing, retrieving files, researching standard designs from previous projects or archived files should be directed through Project Engineering to EN-EC.

10.4 **CONCEPT/EARLY PRELIMINARY (30 PERCENT), (60 PERCENT), CODE 3 AND DESIGN/BUILD RFP SUBMITTAL REQUIREMENTS.**
Specific technical requirements for these submittals may be found in the individual chapters of the respective technical disciplines. Electronic CADD files should be submitted for electronic compatibility review at each submittal stage. Submit all the CADD drawing files with the hard copy submittal to the Project Engineer. CADD drawing files must be submitted in Intergraph DGN, and CAL Type 1 format. Only one set of the CADD files is required. Each electronic drawing submittal package must be labeled as to the base, project name and design submittal percentage.

10.5 **FINAL (100 PERCENT) DESIGN SUBMITTAL REQUIREMENTS.** The drawing guidance given in this chapter is applicable to the Final (100 Percent) Design submittal. Additionally, it should be noted that all title block information (titles, numbering, etc.) must be complete in the Final (100%) Design submittal. Specific technical requirements for this submittal may be found in the individual chapters of the respective technical disciplines. This submittal shall include an electronic copy of all CADD files for the design. CADD drawing files must be submitted in Intergraph DGN, and CAL Type 1 format. Submit all the CADD drawing files with the hard copy submittal to the Project Engineer. Only one set of the CADD files is required. Each electronic drawing submittal package must be labeled as to the base, project name and design submittal percentage.

10.6 **CORRECTED FINAL DESIGN SUBMITTAL REQUIREMENTS**.

10.6.1 Notice. Corrected Final submittals are not considered a normal design level and are required only when Final submittals must be revised or corrected due to error or omission.

10.6.2 General. The drawing guidance given in this chapter is applicable to the Corrected Final Design submittal. The submittal shall include an electronic copy of all CADD files used in the design. Submit all the CADD drawing files with the hard copy submittal to the Project Engineer. CADD drawing files must be submitted in Intergraph DGN, and CAL Type 1 format. Only one set of the CADD files is required. Each electronic drawing submittal package must be labeled as to the base, project name and design submittal percentage.

10.7 **MATERIALS**.

10.7.1 Drawing Media. Drawings shall be plotted on bond paper, drawing size F for Engilish Inch Pound Unit Projects (30" x 42" overall) using borders, title blocks, and zoning as provided on disks. For metric SI designs use drawing size A1 (841 x 594 mm overall). Plain, unbordered sheets are also used for drawings involving overlays. Overlaying tick marks must be displayed for referencing the overlay to the basic drawing.

10.7.2 Other Media. There are various electronic files available from Savannah District, CADD Support Unit, EN-EC. The A-E should request CD-ROM with files through the Project Engineer, or ask for the current Web page where they can be found. Formats available on CD are the following:

a. Border Sheets for both Metric and English jobs
b. Cover Sheet (for jobs with more than 50 drawings - see Savannah District Drafting Standards)
c. Combination Cover/Index Sheet (for jobs with 50 or less drawings)
d. Index of Drawings (for use with Cover Sheet)
e. Color and Finish Schedule
f. Door Schedule Form
g. Location Plans (all bases do not have electronic files)
h. Fence Details
i. Nonreinforced Vehicular Rigid Pavement Joint, Curb, and Gutter Details
j. Nonreinforced Aircraft Rigid Pavement Joint Details
k. Various Cell Libraries
l. Standard Designs from the Army Standardization Program

10.7.3 General Requirements.

10.7.3.1 All drawings will be prepared electronically with software compatible and approved by Savannah District, unless a special waiver has been obtained from Project Management. Color plotting is not acceptable for contract drawings.

10.7.3.2 Excessive patterning should be avoided. Associative patterning or hatching should be used for area patterns and line styles should be used in lieu of linear patterns. The use of multiple line placement to depict line width is not advised.

10.7.4 Intermediate Reproduction Processes. Drawings which the designer/drafter chooses to duplicate during the design process and furnish as contract drawing originals must meet the following requirements: drawing information must be in black (ink-like density and consistency) and be sharp and clearly legible; drawing background must be clean and free of smudges, fold-lines, and extraneous markings.

10.8 **DRAWING PREPARATION**.

10.8.1 Drafting Standards. All linework, text, symbolizing, and other aspects of drafting shall be accomplished in accordance with DP 1110-1-1. Strict adherence to those standards is essential, and use of other symbols and abbreviations should be avoided. Complete legends of symbols and lists of abbreviations shall be included on the drawings for all submittals so that their meanings are clear.

10.8.2 Half-size Reduction. Particular care shall be exercised to insure that all work is prepared for half-size printing. METRIC designs will not, however, be reduced to half-size. Congested areas should be enlarged to a suitable scale. For any sheet or part of a sheet not meeting this standard, the designer will be required to promptly rescale and resubmit, at no additional expense to the Government, a new drawing which is completely readable when reduced half size.

10.8.3 Multicolor Printing. Some jobs may be best represented by drawings prepared for half-size multicolor printing. This process lends itself to many useful applications, which aid the estimator, prospective bidder, construction contractor, and others in interpreting the drawings. Applications and procedures for the color overlay process are included in DP 1110-1-1. However, the color printing process is only applicable when the project is to be advertised in paper format. If electronic bid set (EBS) is used the color option is not available. Consult the Engineering Manager before proceeding down this route.

10.8.4 Drawings Incorporating Photographs. Certain project drawings (e.g., operations and maintenance work, rehab projects, etc.) may be best portrayed by use of digital or scanned photographic images of the actual buildings or aerial photographic site plans. This method may be used only if the text and linework are placed on a separate level from the basic photograph. (The border and title block should be a reference file to the photograph.) Also, those portions of the photograph which lie underneath the text and/or linework must be removed in order to ensure clarity and readability of the composite drawing.

10.8.5 Line Weights. Line weights are illustrated in DP 1110-1-1. Additionally, special care should be taken to distinguish between new and existing work. Line weights for new work shall be heavier than for existing work where they both occur on the same drawing. This procedure must be followed even when preparing for multicolor printing. Only the line weight variations can effectively distinguish between new and existing work on the full-size composite prints (basic with overlays). Scale and space permitting, a separation of three line weights will be used to make this distinction.

10.8.6 Text. Text shall appear to be single stroke commercial Gothic style, all capitals. Minimum height and width shall be 1/8" inch. In metric designs the heights are 3 for drawing scale of 1:1 and 4.40 for titles. The recommended Intergraph fonts are 1 and 3. Font 3 is particularly well suited for tables and rows of numerals.

10.8.9 Special Ft. Bragg Site Drawing Requirements.

- A single map of the entire site (model file) indicating the location of all existing and proposed utilities and other constructions to include the footprint of structures, paving (including curbing), sidewalks, and other relevant planimetric features as they will be at the completion of the project, base bid. Another file for any options, if applicable. Only show existing utilities that will remain.
- The map will be registered to the North Carolina State Plane Coordinate System – Zone 3200 – NAD83 -- U.S. Survey Feet. Elevation units will be MSL GRS80 U.S. Survey Feet.
- Due North on the map will be as viewed from the bottom of the map. Rotations will not be allowed nor will orientation to Magnetic North.
- The map will contain a labeled coordinate grid with spacing appropriate to the map extents. For instance, a map scale of 1″=30′ will have coordinates labeled at 100′ intervals north/south and east/west.
- A minimum of four tie-in points will be labeled on the map located near the four corners of the map. The tie-in points will show a symbol at the location of the point and a label indicating the Northing and Easting of each point.
- All utilities on the map will be clearly labeled as to size and material. Where utilities are to be enclosed in conduits or duct work, a section of the duct will be shown

clearly indicating the dimensions and material of the duct, the contents of the duct such as wire size and type of conductor, whether conductor is primary or neutral, number of conductors, hot water supply or return, pipe size, insulation type and thickness, etc.

- The map will show the invert elevation of all manholes as well as the invert of each pipe joining a manhole as well as the invert and character of all outfalls.

10.9 **DRAWING FORMAT.**

10.9.1 General. All projects shall have a cover and an index sheet or a combination thereof. See pages 1-3 through 1-6 of DP 1110-1-1 for details. General sheet layout should follow guidance outlined in DP 1110-1-1 or in information presented herein by individual design disciplines. If Savannah District is doing the soil borings, reserve some space on the index at the end of the C-plates for the soil boring sheets. The soil boring sheets will be scanned and added as full size drawing sheets at the end of the Civil section. Coordinate with your Project Manager or Project Engineer.

10.9.2 Title Blocks. Pertinent information related to title blocks is shown on pages 1-12 through 1-14 of DP 1110-1-1. Exhibits A-10-4 through A-10-6 (included at the end of this section) illustrate completed, filled-in title blocks as indicated below:

Exhibit A-10-4 A-E Title Block, First Sheet in Drawing Set (English)
Exhibit A-10-5 A-E Title Block, First Sheet for Each Section (Discipline) (English)
Exhibit A-10-6 A-E Title Block, Continuation Sheet (English)
Exhibit A-10-7 Sample Revision Block
Exhibit A-10-8 Metric Cover/Index Sheet Format (Under 50 sheets)
Exhibit A-10-9 Metric Cover Sheet Format (more than 50 sheets)
Exhibit A-10-10 Metric Index Sheet Format (more than 50 sheets)
Exhibit A-10-11 Metric Title Block - First Sheet in set
Exhibit A-10-12 Metric Title Block - First Sheet of Each Section
Exhibit A-10-13 Metric Title Block - Continuation Sheets

The drawing Cover Sheet (see page 1-4, DP 1110-1-1) does not require a title block.

10.9.3 Numbering System. The explanations given below refer to numbering required in title blocks.

10.9.3.1 The Solicitation Number is a single, unique, alpha-numeric number set which denotes the specific construction bid solicitation. Due to Government contracting requirements, this number must be secured and placed on all drawings just prior to final printing.

10.9.3.2 The File Number, reflecting Army and Air Force criteria, defines facility classification category code, and sequence for that type facility. This unique seven-digit number set should be obtained from the Project Manager and placed on all design drawings in the set not later than the Final Design submittal.

10.9.3.3 A Plate Number is assigned to each sheet by the designer/drafter. Plate numbers shall have a letter prefix conforming to the system outlined. (It is understood that some of the categories listed may not be applicable to all jobs.)

Plate Prefix

Type of Work	Designation
Cover Sheet	
Index of Drawings	X-
Civil/Site Development & Grading	C-
Topographical Mapping and Survey	C-
Landscaping L-	
Mechanical Site	MS-
Electrical Site	ES-
Environmental Sewer & Water	W-
Architectural	A-
Interior Design/Furniture Layout	I-
Kitchen Equipment	K-
Life Safety/Fire Protection	F-
Signage	G-
Abatement (Asbestos and/or Lead-Based Paint Removal) or HTRW	H-
Structural	S-
Mechanical	M-
HVAC Controls	MC-
Mechanical Plumbing	P-
Mechanical Fire/Sprinkler	FS-
Electrical	E-
Telecommunications	T-
Security Systems	Q-
Soil Borings	B-

Plate numbers within each group will be numbered consecutively (e.g., A-1, A-2, A-3, etc.). Do not use a "0" before the numbers 1 to 9. This is guidance for sequencing of drawings for large projects and all listings may not be applicable for all projects.

10.9.3.4 The Sheet Number is a sequence number placed consecutively within each drawing set. The total number of drawings in the set, noted thus: SHEET 1 OF XXX, will be indicated only on the first sheet in the set. This will facilitate later revisions. NEVER RENUMBER SHEETS AFTER FINAL SUBMITTAL. If you need to add sheets, simply add a suffix to the sheet number. Example, adding plate A-2A in between sheets 21 and 22. This sheet number would be 21A. The same applies to the CAL files. **DO NOT RENUMBER AFTER FINAL SUBMISSION**.

10.9.3.5 "Ring Number." After the drawings are assembled as indicated above, a sequence number will be assigned and placed on each drawing in the circle at the bottom right-hand border. The first sheet will begin with number 1 and continue consecutively throughout the set. This number is used by reproduction personnel during printing and assembly operations. Usually, the sheet number and the "ring number" will be the same. Variations may occur, however, such as indicated below.

10.9.3.6 Contracts which contain multiple buildings of varied types (e.g., administrative building, barracks, and dining facility) require some variation from the numbering plan outlined above. After the overall site preparation plans, drawings for each building shall be grouped together from other building(s) drawings. A single Solicitation Number will be applied to all drawings in the contract set, just as before. Separate file numbers will be assigned to each building or facility and to the overall project site preparation plans. Plate and sheet numbers will begin anew with each building/facility. If separate file numbers are not assigned, then plate numbers and sheet numbers will be numbered consecutively. However, "ring numbers" follow consecutively throughout the entire set of contract drawings. (Remember ring numbers are for printing purposes not for referencing a drawing.) The drawing Index Sheet(s) should also reflect this grouping of drawings. See TYPICAL DRAWING set arrangement on next page.

10.9.4 Site Adapted Drawings. When site-adapting drawings prepared by Savannah District, other agencies or A-E firms, or utilizing OCE standard drawings, retain the original drawing and title block as is, except for the following items:

a. Change the title block Plate Number, Sheet Number, and "Ring Number" to blend with other drawings in the new set. The old file number should be retained.

b. In the revision block, indicate:

"Adapted by (Firm's Name) and issued by Savannah District for (Name of Installation) under Solicitation No. DACA21-(FY)-B-_ _ _ _."

Fill in the appropriate data items (noted in parentheses) for your specific project.

The site-adapt revision block notation example shown on page 1-15 of DP 1110-1-1 reflects that of an in-house (Savannah District) design effort; for drawings being site-adapted by others, the adapting firm's name should be included as indicated above.

10.9.5 For-Information-Only Drawings. When drawings from previous contracts are deemed necessary for information purposes only, the following procedure will be followed:

a. In the close vicinity of the title block, the following note shall be added:

"THIS SHEET ADDED FOR INFORMATION ONLY UNDER
SOLICITATION NO. DACA21-(FY)-B-_ _ _ _ ."

Fill in the appropriate data items (noted in parentheses) for your specific project. The lettering shall be as large and bold as practicable (up to 1/4" text size) and should be consistent throughout the set of drawings added. The note should be outlined with a bold, rectangular border.

TYPICAL DRAWING SET

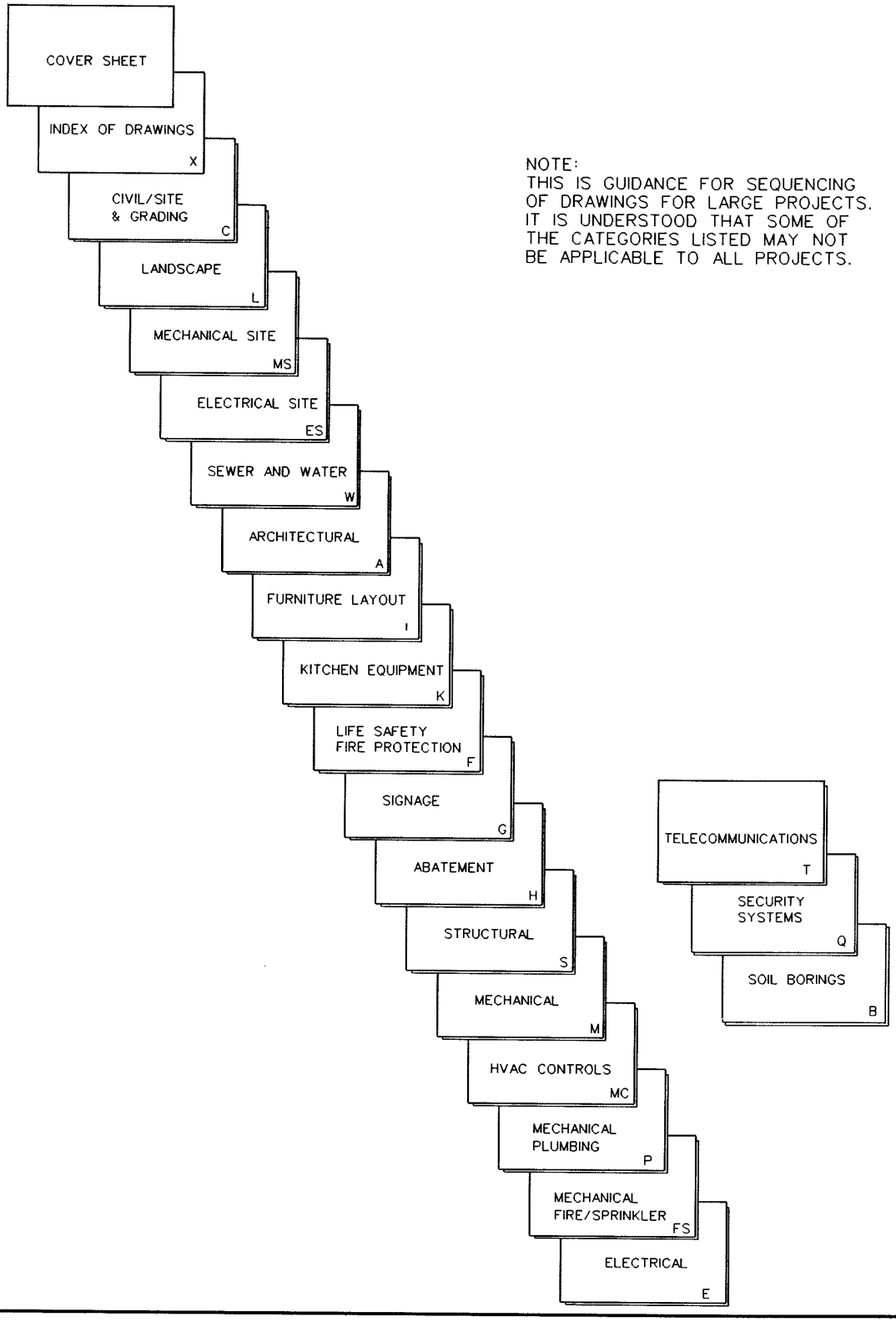

NOTE:
THIS IS GUIDANCE FOR SEQUENCING OF DRAWINGS FOR LARGE PROJECTS. IT IS UNDERSTOOD THAT SOME OF THE CATEGORIES LISTED MAY NOT BE APPLICABLE TO ALL PROJECTS.

b. No change should be made to the title block or the revision block; however, the "Ring Number" should be changed or added to blend with others in the overall drawing set.

c. The added drawing titles should be reflected on the Index Sheet wherever they occur. However, they should also be annotated "FOR INFORMATION ONLY" on the Index Sheet. A dash should be inserted in the Index Sheet columns which would normally show Plate, Sheet, and File Numbers.

10.10 **DRAWING CHECKLIST.** Exhibit A-10-14 is a checklist for design drawings. It is not intended to serve as a substitute for all of the drafting standards and criteria cited herein; however, careful use of the list will avoid most of the drafting deficiencies and problem areas encountered in the past. The checklist should be used by the A-E prior to each submittal involving drawing to Savannah District.

10.11 **DRAWING REVISIONS.** In general, the designer/drafter may be involved in two types of project revisions: preparation of amendments during the advertising period and the preparation of contract modifications subsequent to award of the construction contract. The methods and procedures for reflecting these changes on drawings are described below.

10.11.1 Amendment Drawings. **All amendment revisions to drawings are made by issuing new revised drawing(s).** There will be no written amendments. Use the first available space in the revision block and identify it as Revision 1 (teardrop), or the next sequentially higher number for that drawing. Thus, the revision (teardrop) numbers for a given amendment may vary from drawing to drawing and will not necessarily match the amendment number itself.

10.11.1.1 Revised Reissued Drawings. Where revised drawings are to be reissued as part of the amendment, a listing of these drawings must be in narrative format as shown on Exhibit A-10-17. The listing must indicate the teardrop number and the brief description of the revision which is also to be incorporated in revision block of the drawing.

All revisions reissuing drawings will be tear-dropped on the drawing at the point of revision and will carry a revision number, which will be shown in the column headed "Symbol" in the revision block of the drawing. Zones will be identified when practicable. The zones appear along the borders of the drawings and are used for location purposes within the drawing (numbers horizontally and letters vertically). A brief description of the revision will be entered under "Description" in the drawing revision block as illustrated by Revision 1 (teardrop 1) in Exhibit A-10-17. Where revisions are too numerous to describe, the phrase "GENERAL REVISIONS" will be entered under "Description" as illustrated in Revision 2 (teardrop 2), Exhibit A-10-17.

10.11.1.2 Added Drawings. For sheets to be added by amendment, the revision block will be annotated "Sheet Added by Amendment" at the "Description", no teardrop should be placed in the symbol area. Added sheet titles and other information will be shown on the Index of Drawings sheet.

10.11.1.3 Deleted Drawings. For sheets to be deleted by amendment, the revision block will not be teardropped and the words "Sheet Deleted by Amendment" will be entered under "Description" and the revision block initialed. Sheets deleted by amendment will be shown as "Deleted" on the Index of Drawings sheet.

10.11.2 Modification Drawings. Modifications to construction contracts are high priority items and shall be acted upon without delay. Timely preparation of contract documents to accompany the modification package will prevent undue delay in construction schedules. Upon receipt of design requirements for a proposed modification, the A-E will proceed with preparation of the necessary changes or additions. The completed package will be forwarded to the Project Manager for finalization and subsequent implementation by Construction Division. Modifications to the construction contract may be accomplished by application of one or more methods available to the A-E. Formulating a clear, concise, and accurate modification package cannot be overemphasized.

10.11.2.1 Adding a sketch to the existing set of contract drawings is one method of accomplishing changes desired. The Project Manager will, upon request, furnish an electronic sketch sheet border file, which are standard within the Savannah District, to the A-E for preparation of the sketch. The sketch should be large enough, whether to scale or not, to assure easy reproduction for field use and record purposes. Care should be exercised in completing all information specified at the bottom of the sketch form.

10.11.2.2 Another method of modifying the contract documents is to revise an existing drawing. Care should be taken in conforming to Drafting Standards. Exhibit A-10-17 is an example of acceptable terminology which should appear in the revision block. The "MCB No." may be obtained from the Project Manager in the Savannah District office. Each modification should be properly tear-dropped, described, dated, and initialed by the A-E. See Notes 1 thru 5 of Exhibit A-10-17 for additional instructions.

10.11.2.3 Occasionally a modification requires preparation of one or more new sheets because of the magnitude of the change. For sheets to be added by modification, the revision block will not be tear-dropped and the words "Sheet Added by MCB-##-#" will be entered under "Description" and the revision block initialed. Care should be exercised in assigning sheet and plate numbers to new drawings. For example, if a new sheet is to be inserted between existing Sheets 19 and 20, the proper identification would be Sheet 19A. All drawings added by modification should be noted on the Index of Drawings.

10.12 **SPECIFIC INSTRUCTIONS**. Exceptions to these guidelines or additional guidance relative to a specific job may be provided in the Specific Instructions to A-E for that job.

CHAPTER A-10

DRAWINGS

EXHIBITS

1 - ABBREVIATIONS OF MILITARY AND CIVIL PROJECTS FOR FILE NAMING PURPOSES
2 - CADD DESIGN FILE LEVEL SCHEME
3 - A-E - FIRST SHEET TITLE BLOCK FOR DRAWINGS (ENGLISH)
4 - A-E - FIRST SHEET TITLE BLOCK FOR EACH SECTION (ENGLISH)
5 - A-E TITLE BLOCK FOR CONTINUATION SHEETS (ENGLISH)
6 - SAMPLE OF REVISION BLOCK (AMENDMENTS & MODIFICATIONS)
7 - COVER/INDEX SHEET FORMAT (METRIC)
8 - COVER SHEET FORMAT (METRIC)
9 - INDEX SHEET FORMAT (METRIC)
10 - TITLE BLOCK FIRST SHEET IN SET (METRIC)
11 - TITLE BLOCK FIRST SHEET IN SECTION (METRIC)
12 - TITLE BLOCK CONTINUATION SHEET (METRIC)
13 - DRAWING CHECKLIST
14 - SKETCH SHEET

ABBREVIATIONS FOR MILITARY AND CIVIL PROJECTS FOR FILE NAMING PURPOSES

First Letter of File Name
For
Military and Civil Projects
For File Name Purposes

AIWW	**A**
Fort Benning	**N**
Fort Bragg	**B**
Brunswick Harbor	**V**
Dobbins AFB	**D**
Donaldson AFB	**O**
Fort Gillem	**L**
Fort Gordon	**G**
Hartwell Dam & Lake	**W**
Hunter AAF	**H**
Fort Jackson	**J**
Kings Bay Naval Subbase	**K**
Fort McPherson	**F**
Moody AFB	**M**
Pope AFB	**P**
Richard B. Russell Dam & Lake	**U**
Robins AFB	**R**
Savannah River	**Z**
Seymour Johnson AFB	**C**
Fort Stewart	**S**
Strom W. Thurmond Dam & Lake	**X**
Sunny Point Military Ocean Terminal	**T**
Turner AFB	**E**
Tybee Island	**Y**

HTRW

Formerly owned defense sites (FODS) - Use two letters for site name.
TU TURNER AFB
ND DONALDSON AFB

CHAPTER A-11

SPECIFICATIONS

INDEX

11.1 GENERAL

11.2 APPLICABLE PUBLICATION

11.3 PRECONCEPT SUBMITTAL REQUIREMENTS

11.4 CONCEPT, CODE 3 DESIGN REQUIREMENTS AND EARLY PRELIMINARY (35 PERCENT) DESIGN SUBMITTAL REQUIREMENTS

11.5 SIXTY PERCENT (60 PERCENT) SUBMITTAL REQUIREMENTS

11.6 PRELIMINARY (60 PERCENT) DESIGN SUBMITTAL REQUIREMENTS

11.7 FINAL (100 PERCENT) DESIGN SUBMITTAL DELIVERABLES
- 11.7.1 Final Specifications
- 11.7.2 Aids to Advertising
- 11.7.3 Questions

11.8 CORRECTED FINAL DESIGN SUBMITTAL REQUIREMENTS
- 11.8.1 Notice
- 11.8.2 Corrected Submittal

11.9 REQUIREMENTS FOR DESIGN/BUILD RFP PACKAGES

11.11 TYPES OF SPECIFICATIONS
- 11.11.1 Available Guide Specifications
- 11.11.2 Other Specifications
- 11.11.3 Availability of Federal and Military Specifications, Standards, and Descriptions

11.12 SPECIFICATION PREPARATION METHODS
- 11.12.1 SPECSINTACT
- 11.12.2 Using SPECSINTACT
- 11.12.3 Guide Specifications
- 11.12.4 Developing Unique Project Specifications

11.13 FINAL SPECIFICATION PREPARATION
- 11.13.1 Technical Specification Scope
- 11.13.2 Quality of Work
- 11.13.3 Specification Format
- 11.13.4 Checklist
- 11.13.5 Notes to the Specification Writer
- 11.13.6 Contractor Submittal Requirements
- 11.13.7 Payment Paragraphs
- 11.13.8 Paragraph Numbers

11.13.9 Omitted Paragraphs
11.13.10 SPECSINTACT Verification Reports

11.14 PREPARING A-E DEVELOPED SPECIFICATIONS

11.15 PROJECT REVIEW COMMENTS

11.16 CONTRACT PLANS AND SPECIFICATIONS
11.16.1 Handling Bidder Inquiries
11.16.2 Clarification Inquiries

11.17 AMENDMENTS

11.17.1 Amended Specifications
11.17.2 Amendment Narrative
11.17.3 Deleted Paragraphs
11.17.4 Deleted Specifications

11.18 MODIFICATIONS
11.18.1 Scope of Work
11.18.2 Specifications
11.18.3 Modification Drawings or Sketches
11.18.4 Modification Estimate

CHAPTER A-11

SPECIFICATIONS

11.1 **GENERAL**. The Engineering Support Services Section (EN-ES) coordinates the activities related to the preparation and issuance of the bid document for formally advertised projects. The section assists the A-E with the format and administrative requirements involved with preparing the technical provisions of the contract specifications and reviews these specifications for continuity of bid documents.

The A-E must subscribe to the Construction Criteria Base (CCB) available from National Institute of Building Sciences (NIBS). They provide technical information on CD-ROM and Internet resources free to design agents under contract. Phone (202)289-7800, Fax (202) 289-1092, or E-mail nibs@nibs.org. The CCB CD disks contain the SPECSINTACT software discussed in this chapter and all the technical guide specifications referenced herein.

This chapter has been prepared to assist the A-E in preparing the contract technical specifications. Questions relating to this chapter or any facet of specification writing or preparation shall be directed to the Savannah District Project Manager. The Engineering Support Services Section will promptly respond to the Project Manager's inquiry.

11.2 **APPLICABLE PUBLICATIONS**.

ER 1110-345-100 Design Policy for Military Construction

ER 1110-1-8155 Specifications

ER 415-1-10 Contractor Submittal Procedures

Federal Acquisition Requirements
- Part 6, Competitive Requirements
- Part 7, Acquisition Planning
- Part 10, Specification, Standards and Other Purchase Descriptions
- Part 36, Construction and Architect-Engineer Contracts

11.3 **PRECONCEPT SUBMITTAL REQUIREMENTS**. Outline specification will be provided at this stage. As a minimum, provide a listing of the specification sections that will be required for the project.

11.4 **CONCEPT, CODE 3 DESIGN REQUIREMENTS AND EARLY PRELIMINARY (35 PERCENT) DESIGN SUBMITTAL REQUIREMENTS**. The A-E shall submit an outline specification listing the proposed guide specifications and A-E prepared sections that will be required for the project. The proposed specification sections shall be shown on the outline specification using the CEGS number and title. Sections shall be arranged within their respective divisions, in numerical order. New specification sections developed by the A-E shall be numbered to fall in the respective division at a logical location for the job.

11.5 **PRELIMINARY (60 PERCENT) SUBMITTAL REQUIREMENTS**. No specifications will be required at this submittal.

11.6 **PRELIMINARY (60 PERCENT) DESIGN SUBMITTAL REQUIREMENTS**. No specifications will be required at this submittal.

11.7 **FINAL (100 PERCENT) DESIGN SUBMITTAL REQUIREMENTS**.

11.7.1 Final Specifications. The A-E shall provide one hard copy, single sided, (ORIGINALS MANUSCRIPT) of the final project specifications, in order (NOT stapled) and an electronic copy on 3-1/2 inch floppy disk or on CD in SPECSINTACT format. The original technical sections shall have been prepared in accordance with the specific requirements and instructions contained in this chapter and printed on letter quality or laser printer on bond paper.

11.7.2 Aids to Advertising. The A-E shall submit the following as part of the final design submittal package to aid in the preparation of the solicitation package.

11.7.2.1 Scope of Work. The A-E shall submit a Scope of Work. The scope will be a brief written description of the work involved and will include a listing of approximate quantities, such as "the work includes the construction of a 250,000 square foot administrative building...." The project site shall be located by including the name of the county and state in which the work is done. Also, the appropriate cost range shall be selected by the A-E from the ranges listed below and included at the end of the resume:

less than $25,000
between $25,000 and $100,000
between $100,000 and $250,000
between $250,000 and $500,000
between $500,000 and $1,000,000
between $1,000,000 and $5,000,000
between $5,000,000 and $10,000,000
between $10,000,000 and $25,000,000
between $25,000,000 and $50,000,000
between $50,000,000 and $100,000,000
over $100,000,000

See Exhibit A-11-5.

11.7.2.2 Construction Time Estimate. The A-E shall submit a Construction Time Estimate and the rationale used to develop the estimate. When preparing the estimate, consideration shall be given to procurement of materials, sequence of construction, climatic conditions to be encountered during construction, etc.

11.7.2.3 List of Drawings. The A-E shall submit a list of drawings. The list of drawings consists of sheet numbers, drawing titles, revision number (if applicable) and latest date, and electronic file name. The file number is placed at the top of the sheet number column of each page of the list of drawings. File numbers shall be obtained by the A-E from the

Project Manager. The latest date shall consist of the day, month, and year and shall match the date entered in the drawing title block. Drawing titles entered on the list of drawings shall match exactly the titles on the individual drawings. List of drawings for civil projects includes one additional column entitled Drawing No.

11.7.2.4 Schedule (Section 00010). The A-E shall submit a proposed Schedule for bidding purposes. The Schedule shall set up all lump sum and unit price items for work to be accomplished under the contract. The Schedule shall be carefully coordinated with the payment paragraphs (if required) included in the technical specifications. In instances where extremely small quantities are involved in the exterior items of work, payment will be on a "job lump sum basis" (see Exhibit A-11-2). When large quantities are involved in exterior items of work, payment will be made on a "unit price basis" (see Exhibit A-11-3). A list of quantities for each item of outside work--site preparation, drainage, paving and utilities--will be submitted with the quantity takeoff regardless of whether the item is paid for on a lump sum or unit price basis (see Exhibit A-11-4).

11.7.2.5 Table of Contents. The A-E shall prepare and submit a Table of Contents for technical specifications.

11.7.2.6 List of Government-Furnished Equipment. If applicable, the A-E shall submit a list of Government-furnished equipment, including the description, weight, size, quantities, and approximate value for inclusion in the contract clauses of the solicitation. This list is usually applicable in renovation or relocation projects when the user wishes to relocate existing equipment. This list shall be furnished in two categories, Government-Furnished, Contractor-Installed (GFCI) and Government-Furnished, Government-Installed (GFGI), if applicable.

11.7.2.7 Salvable Material. If applicable, the A-E shall submit information concerning any salvable material.

11.7.2.8 Special Situations. The A-E shall submit information covering any unusual situations, i.e., interface problems, outages, security and/or safety requirements, storage areas, construction sequences and phasing requirements, access to site, early completion dates, etc.

11.7.2.9 Additional Submittals. The complexity of some projects may require additional submittals, other than those previously listed. The A-E shall be advised of any additional submittal requirements and shall submit them as directed.

11.7.3 Questions. Any questions concerning the above listed submittal requirements should be directed to the Project Manager.

11.8 **CORRECTED FINAL DESIGN SUBMITTAL REQUIREMENTS**.

11.8.1 Notice. Corrected final submittals are not considered a normal design level and are required only when final submittals must be revised or corrected due to error or omission.

11.8.2 Corrected Submittal. When this submittal stage is required, the A-E shall submit the final project specification that has been corrected and/or revised in accordance with the Final Design Submittal review comments. The submittal shall include the A-E's annotated comments (see paragraph 11.14) indicating the action taken on each of the review comments.

11.9 REQUIREMENTS FOR DESIGN/BUILD RFP PACKAGES. To be provided by specific instructions to contract or delivery order.

11.10 TYPES OF SPECIFICATIONS.

11.10.1 Available Guide Specifications. All final project specifications shall be prepared using the guide specifications obtained from CD-ROM Construction Criteria Base (CCB) or furnished by the Savannah District, unless the A-E must prepare job specific specifications when guide specifications are not available. The guide specifications are to be edited and adapted by the designer to fit each individual project in accordance with the project requirements. The designer is to delete the inapplicable portions of the guide specifications and revise and/or supplement, as required, the applicable portions to provide a complete project specification. Deviations, except as authorized by ER 1110-1-8155, will not be allowed without prior approval through the Savannah District.

11.10.1.1 Corps of Engineers Guide Specifications (CEGS). CEGS specifications are prepared by the Office, Chief of Engineers, and are available from the National Institute of Building Sciences on CD-ROM Construction Criteria Base (CCB) disks at a subscription cost. CEGS will be used in the preparation of project specifications in accordance with ER 1110-1-8155. CEGS will not be made a part of project specifications by reference; pertinent portions of CEGS will be copied verbatim into project specifications.

11.10.1.2 Savannah District Guide Specifications. Savannah District has developed guide specifications, based on corresponding CEGS guide specifications, to fit local conditions. Where Savannah District has prepared a guide specification, it shall be used in lieu of the CEGS guide specification. An index of these guide specifications may be obtained from the Project Manager. These specification sections are available on CD-ROM in SPECSINTACT format from Savannah District.

NOTE: THESE GUIDE SPECIFICATIONS COVER THE USUAL AND PREFERRED TYPES OF CONSTRUCTION USED IN THE SAVANNAH DISTRICT AND ARE IN ACCORDANCE WITH THE REQUIREMENTS OF THE TECHNICAL MANUALS AND THE ARCHITECTURAL AND ENGINEERING INSTRUCTIONS AND AS REQUIRED BY LAW TO PROVIDE OPEN AND COMPETITIVE BIDDING WITHOUT PROPRIETARY EXCLUSION OF ACCEPTABLE PRODUCTS. THE GUIDE SPECIFICATIONS, INCLUDING "NOTES TO SPECIFICATION WRITER," SHALL BE REVIEWED BEFORE STARTING THE DRAWINGS AND AGAIN BEFORE WRITING THE SPECIFICATIONS. SEE ER 1110-1-8155 FOR CRITERIA, GUIDANCE, AND LIMITATIONS NOT COVERED BY THESE STANDARD PROCEDURES. YOU ARE SPECIFICALLY CAUTIONED ABOUT DEVIATIONS AS OUTLINED IN ER-1110-1-8155.

11.10.1.3 Editing of Guide Specifications. Each guide specification used in the preparation of project specifications will be edited to fit the requirements of the project. Where numbers, symbols, words, phrases, clauses, or sentences are enclosed in brackets [ ], a choice or modification must be made; exercise care in making the choice or modification. Where blank spaces are provided for the insertion of data or text, insert the appropriate information. Where entire paragraphs are not applicable they must be omitted. When necessary to add additional requirements, be sure they are consistent with the other requirements of the guide specifications and that they do not unnecessarily restrict products that can be furnished.

11.10.2 Other Specifications. When there is no appropriate CEGS or Savannah District guide specification for a particular topic, the A-E will prepare the required specification. The specification shall be arranged and typed using the CEGS format and coded in SPECSINTACT. The CD-ROM disk from the National Institute of Building Sciences contains guide specifications from many Government agencies and is a good source for topics not covered by the CEGS. The specification shall not be written around materials, equipment or procedures which restrict competitive bidding unless a specific waiver has been obtained by the Project Manager. The A-E shall prepare the required section using one of the following procedures:

11.10.2.1 Functional or Descriptive Specifications. The A-E will normally be instructed to prepare "functional or descriptive specifications" using industry standards, manufacturer's data, and other available information. These specifications shall be prepared and developed by listing parameters, methods, techniques and other requirements that several manufacturers can satisfy. These specifications shall list the essential features, requirements, minimum functions, and other factors to clearly indicate the type and quality of item required. Specifications should not be developed around a single manufacturer. Questions concerning the preparation of specifications of this type should be directed to the Project Manager.

11.10.2.2 Sole Source Specifications. There may be instances when only one manufacturer's product will satisfy job conditions. For example, in rehabilitation work, updating a particular piece of existing mechanical equipment may require new parts from the manufacturer of that particular piece of equipment. A sole source type may be acceptable in this instance provided prior approval is received from higher authority. To receive approval, the A-E will be required to provide written sole source justification to the Project Manager. This justification should be prepared and presented as early in the design process as possible, since approval usually takes considerable time. The A-E should be aware that preparing proprietary type specifications based on trade, brand, manufacturer's name or adopting a manufacturer's description of a particular article or procedure are unacceptable and should be avoided if at all possible.

11.10.2.3 "Or Approved Equal" Specifications. In some instances, acceptable standards of quality may be listed by brand name or approved equal. In some cases, it is preferred that the names of at least three manufacturers (with current addresses and phone numbers) as well as model numbers be listed. Each of the listed items should be items exhibiting the functional characteristics required. Each brand name should be followed by the words "or approved equal." The intent of the "or approved equal" procedures is to

offer bidders the opportunity to substitute items equal in functionality and quality. "Or approved equal" specifications should be avoided, in preference to "functional or descriptive specifications" as discussed in paragraph 11.9.2.1 above.

11.10.2.4 Other Federal Agency Specifications. Savannah District has access to guides specifications of other Federal agencies. Upon request, the Engineering Management and Support Section will assist in conducting a global search for key words or phrases on specific topics. Such special assistance is limited and requests for this assistance must be directed through the Project Manager.

11.10.3 Availability of Federal and Military Specifications, Standards and Descriptions. Guide specifications make numerous references to other publications. Access by the A-E to these publications is available on a CCB CD-ROM disk set available from the National Institute of Building Sciences or from:

11.10.3.1 Unclassified Federal, Military, and Other Specifications and Standards (Excluding Commercial), and Data Item Descriptions. Submit request on DD Form 1425 (Specifications and Standards Requisition) to:

Commanding Officer
U.S. Naval Publications and Forms Center
5801 Tabor Avenue
Philadelphia, PA 19120

The Acquisition Management Systems and Data Requirements Control List, DOD Directive 5000.19L, Volume II, may be ordered on the DD Form 1425. The Department of Defense Index of Specifications and Standards (DODISS) may be purchased from the Superintendent of Documents, U.S. Government Printing Office, Washington, DC 20402. When requesting a specification or standard, the request shall indicate the title, number, date and any applicable amendment thereto by number and date. When requesting a data item description, the request shall cite the applicable data item number set forth in the solicitation. When DD Form 1425 is not available, the request may be submitted in letter form, giving the same information as listed above, and the solicitation or contract number involved. In case of urgency, such requests may also be made to the activity by telegram or telephone ((215) 697-3321).

11.10.3.2 Commercial Specifications, Standards and Description. These specifications, standards and descriptions are not available from Government sources. They may be obtained from the publishers.

11.10.3.3 Engineering Manuals and Concrete Research Division Publications may be obtained from the addresses given below. Requests for these manuals and publications should give the title, number, date and any applicable amendment or revision thereto by number and date.

Engineering Manuals:

Chief of Engineers

ATTN: DAEN-ASP-D
Department of the Army
890 South Pickett Street
Alexandria, VA 22304

Concrete Research Division Publications:

U.S. Army Engineer Waterways Experiment Station
ATTN: Publications Distribution Unit
P.O. Box 631
Vicksburg, MS 39180

11.11 **SPECIFICATION PREPARATION METHODS**. The Savannah District accepts only specifications prepared in SPECSINTACT format.

11.11.1 SPECSINTACT. The CCB CD-ROM disk from the National Institute of Building Sciences contains a word processing software specifically tailored for specification editing of CEGS specification on the CD-ROM. This software is called SPECSINTACT and is available to subscription buyers only. Updated CEGS specifications are provided quarterly. Information regarding SPECSINTACT is available from Huntsville Division, U.S. Army Corps of Engineers, P.O. Box 1600, Huntsville, AL 35807-4301, telephone: (205)955-5270.

11.11.2 Using SPECSINTACT. Refer to SPECSINTACT Manual. Training is available on preparing specifications using SPECSINTACT through your Corps of Engineers Project Engineer.

11.11.3 Guide Specifications. CEGS Guide Specifications are on the CCB CD disks and are also available from Hunstsville District at Internet address http://www.hnd.usace.army.mil/techinfo/. Additionally Savannah District has a small collection of District specific guide specifications available through the Project Engineer that have been coded in SPECSINTACT format.

11.11.4 Developing Unique Project Specifications. When there is no suitable industry standard, federal specification, or other impartial standard for specifying a specific item or material, "trade name or equal" material requirement may be used in Part 2, PRODUCTS of a specification section. This should be avoided in most projects. When sole source (only one acceptable product) requirements are included in the specifications, for each such requirement the designer will develop the items described at FAR 6.303-2. The format of unique specifications shall follow the same format as the CEGS specifications.

11.12 FINAL SPECIFICATION PREPARATION. Provide the following with the final submittal.

Concise scope of work for the project.

Construction time estimate.

Drawing list. The A-E will provide a drawing list, listing sheet number and title, and electronic CAD file name. This list shall be provided in electronic format.

Proposed schedule.

Table of Contents for technical specification sections.

List of Government-furnished equipment.

Salvageable materials.

Contractor's submittal requirements on ENG FORM 4288.

Hard copy originals and electronic copy of edited specifications.

Special situations which affect construction schedules.

11.12.1 Technical Specification Scope. The technical specifications shall include performance and specific tasks type specifications for all work required to complete the project.

11.12.1.1 The A-E will be responsible for the accurate preparation of the technical specifications. Savannah District will prepare the nontechnical portion of the specifications (i.e., boilerplate or contract clauses) with some input required from the A-E and Project Manager. For instance, although the Engineering Support Services Section will prepare the SPECIAL CONTRACT REQUIREMENTS, the A-E will be expected to furnish pertinent information that the Savannah District might otherwise be unaware of, for inclusion in the SPECIAL CONTRACT REQUIREMENTS. The A-E will also be required to prepare a drawing list which will be included in the SPECIAL CONTRACT REQUIREMENTS, and a written Resume of Work to be included in the Pre-Solicitation Notice and the SPECIAL CONTRACT REQUIREMENTS, and a list of "Contractor Submittal Requirements." The A-E will also have considerable input in preparation of the "Schedule." Generally speaking, when requested by the Project Manager, the A-E will provide additional information as necessary for inclusion in the nontechnical portion of the specifications.

11.12.1.2 The A-E will delay preparation of the project specifications until after the preliminary review stage. Generally, guide specifications must be edited by the A-E to satisfy the requirements of the particular project being designed. The Contractor submittal register must be edited to include all those submittals required. The drawings and specifications must complement each other. All extraneous and irrelevant information contained in the guide specifications must be eliminated. Likewise, information not originally contained in the guide specifications must be added to ensure a complete specification. Furthermore, functional or descriptive specifications must be developed as necessary to fully specify the requirements of the project being designed.

11.12.2 Quality of Work. In accordance with the "Responsibility of the Architect-Engineer" clause of the Contract Clauses of the Architect-Engineer contract, the A-E is totally responsible for the content of the technical specifications and for material shown on

the drawings which has been inadvertently omitted from the specifications. The specifications shall be complete, accurate, clear and precise and shall not be subject to interpretation. They shall be specific and free of ambiguities.

11.12.2.1 The A-E shall coordinate the specifications with the drawings and cross check all references within the specification for agreement with the drawings and other sections of the specifications.

11.12.3 Specification Format. The final project specifications shall be prepared in SPECSINTACT format.

11.12.3.1 Specifications shall be of reproducible quality and printed on a letter quality printer. Dot matrix printed specifications are not acceptable.

11.12.3.2 A Table of Contents to the technical provisions shall be furnished.

11.12.3.3 Provide complete ENG Form 4288, Submittal Register.

11.12.4 Checklist. A checklist for final specification preparation is included as Exhibit A-11-1 and should be used to ensure that specifications are acceptable. If any of the questions are answered "NO," that portion of the work is unacceptable. Any questions resulting from answering the checklist should be referred to the Project Manager.

11.12.5 Notes to the Specification Writer. Specific "NOTES TO THE SPECIFICATION WRITER" are included in the body of technical guide specifications. These notes are denoted by a row of asterisks above and below the notes. These notes form an important part of Corps of Engineers technical requirements and offer direction to the specification writer. They should be carefully followed not only in preparing the specification but particularly in preparation of drawings. In many instances, reference is made to items not included in the main body of the specification. It is required that the A-E read the notes and comply with the instructions contained therein. It is very important to provide drawing details referenced in the specification. At the final design submittal stage, the A-E will submit the finished hard copy of the project specifications.

11.12.6 Contractor Submittal Requirements. The specifications shall require the Contractor to submit shop drawings, samples, manufacturer's data, certificates, test reports, etc. as appropriate. The A-E will be required to furnish a listing of the Contractor's submittal requirements on ENG Form 4288. SPECSINTACT prepares this form automatically.

11.12.6.1 For an A-E prepared specification section, the A-E shall properly code the SPECSINTACT document so that submittals will be included in ENG Form 4288.

11.12.7 Payment Paragraphs. No payment paragraphs will be required when bid items on the Schedule are all job, lump sum. Payment paragraphs are required for those sections which cover miscellaneous utilities, roadways, site development and other outside facilities set up for separate payment at a unit price. Each section of specifications which sets items of work for separate payment shall have a paragraph entitled "PAYMENT." This

paragraph shall be so worded as to conclusively indicate the method of payment and shall be fully coordinated with the applicable item listed in the Schedule.

11.12.8 Paragraph Numbers. When editing a guide specification in preparing the final project specification, the A-E shall verify that all paragraph numbers in a section are properly connected in sequence.

11.12.9 Omitted Paragraphs. When editing a guide specification in preparing the final project specifications, the A-E shall indicate omitted paragraphs that are required to connect paragraph numbering as follows:

11.12.9.1 Omitted main paragraphs shall be shown in the section text as OMITTED using all capital letters.

11.12.9.2 Omitted subparagraphs shall be shown in the section text as Omitted using initial caps.

11.12.9.3 Omitted paragraphs that are not required to connect the paragraph numbers shall be deleted entirely and not shown in the final specifications.

11.12.9.4 All consecutively numbered omitted paragraphs shall be shown single spaced.

11.12.10 SPECSINTACT Verification Reports. Verification reports for brackets, sections and references will be run before submission of final specifications. Any errors found with these reports will be corrected before submission.

11.13 **PREPARING A-E DEVELOPED SPECIFICATIONS**. When the A-E is required to prepare a specification section for a unique product or procedure, the section shall be prepared using SPECSINTACT.

11.14 **PROJECT REVIEW COMMENTS**. The A-E shall annotate the action taken on each concept/preliminary, final or corrected final review comment and shall include the annotated comments with the appropriate submittal package. If the A-E feels that any comment is inappropriate or in error, he shall contact the Project Manager to resolve the conflict. If the comment is modified or omitted as a result of this coordination, then a brief record of the conversation shall be included with the annotated comments.

11.15 **CONTRACT PLANS AND SPECIFICATIONS**.

11.15.1 Handling Bidder Inquiries. Plans and specifications are furnished to the A-E's for those projects they have designed at the same time they are furnished to bidders. Questions from contractors or suppliers to the A-E requiring interpretation should be referred to the Savannah District. An example of this reasoning would be an occurrence wherein a supplier queried an A-E as to whether a certain insulation would meet requirements of the specifications. He reputedly was told that it would, and based his bid accordingly. Criteria requirements had been changed subsequent to design completion by the A-E. The Savannah District had changed the specifications to conform to the new criteria. The insulation proposed would not meet the new requirements.

11.15.2 Clarification Inquiries. The above guidance is not intended to discourage A-E's from following through on requests for clarification, etc., received from bidders. In many cases such requests require clarification or correction. In such cases, the A-E should notify the Project Manager in the Savannah District by the most expeditious means of communication available of the nature of the discrepancy and his recommendations for correction. This action permits correction by amendment to the solicitation rather than by a more expensive contract modification.

11.16 **AMENDMENTS**. During the advertisement period as discrepancies, oversights, omissions, and other changes surface, the A-E will be required to prepare affected drawings and specifications for amendment. All questions involving the amendment procedure should be addressed to the Project Manager. Federal regulations require that bidders be given ample time for the necessary assimilation of the materials contained in the amendment, and that the material is received at least 14 days prior to bid opening date. (This date is shown on page 00010-1 of the SOLICITATION, OFFER, AND AWARD form.) When required, the A-E will furnish to Savannah District, no later than 3 weeks prior to date of bid opening, a CD reflecting revised specifications and drawings incorporating all amendment changes.

11.16.1 Amended Specifications. The A-E is required to furnish revised sections electronically including all changes made by amendment. The A-E is required to send in paper copy of the revised pages. Revised text will be indicated by underlining; deleted text will be struck out (this is a feature of SPECINTACT). Each revision will be indicated by placing an asterisk and the amendment number (e.g. *1, *2, etc.) in the left margin.

11.16.2 Amendment Narrative. Paragraph A of the sample amendment (Exhibit A-11-6) shows the tabulation by which revised, added and/or deleted pages are made a part of the documents. Each revised or added section will carry the statement "(Revised by Amendment No. 000_)" or "(Added by Amendment No. 000_)" to the right of the page number.

11.16.3 Deleted Paragraphs. In preparing the original specifications, omitted paragraphs and subparagraphs were shown as "Omitted." In revising the specifications by amendments, the paragraphs being removed are shown as "Deleted."

11.16.4 Deleted Specifications. When an entire specification section is deleted, list the section in the "Deleted Sections" column of paragraph A.

11.17 **MODIFICATIONS**. Modifications to construction contracts are high priority items and shall be acted upon without delay. Timely preparation of contract documents (see Exhibit A-11-7) to accompany the modification package will prevent undue delay in construction schedules. Upon receipt of design requirements for a proposed modification, the A-E will proceed with preparation of the necessary changes or additions. The completed package will be forwarded to the Project Manager for finalization and subsequent implementation by Construction Division. Modifications to the construction contract may be accomplished by application of one or more methods available to the A-E.

Formulating a clear, concise, and accurate modification package cannot be overemphasized.

11.17.1 Scope of Work. One of the most important items the A-E must furnish for a modification is a clear concise scope of work for all major aspects of the modification.

11.17.2 Specifications. When revisions or additions to the specifications are necessary, the changes will be underlined and deletions will be struck out. The applicable note will be typed indicating an addition or revision to the specifications "(Revised by MCB-__-_)" or "(Added by MCB-__-_)" to the right of the page number.

11.17.3 Modification Drawings or Sketches. Refer to Chapter A-10 for discussion of modifying contract drawings.

11.17.4 Modification Estimate. Cost estimates should be prepared in detail as required for final design documents as described in Chapter A-9, COST ESTIMATES, of this manual. The cost estimate must accompany the finished modification package.

CHAPTER A-11

SPECIFICATIONS

EXHIBITS

A-11-1. Checklist for Final Specification Preparation

A-11-2 Sample Bidding Schedule Suggested for Small Projects and Projects with Site Work and Utilities Minor

A-11-3 Sample Bidding Schedule Suggested for Larger Projects

A-11-4 Sample Bidding Schedule Suggested for Larger Projects with Multiple Additives

A-11-5 Scope of Work

A-11-6 Amendment Preparation - Electronic Bid Sets (EBS)

A-11-7 Amendment Preparation - Paper (Non-EBS)

A-11-8 Modification Preparation

CHECKLIST FOR FINAL SPECIFICATION PREPARATION

	YES	NO
a. Have all "gaps" been eliminated where material has been omitted from text?	____	____
b. Have verification reports been run and errors corrected?	____	____
c. Are omitted main paragraphs indicated as "OMITTED" and omitted subparagraphs indicated as "Omitted"?	____	____
d. Are consecutively omitted paragraphs single spaced?	____	____
e. Are all paragraph numbers connected?	____	____
f. Has ENG Form 4288 SUBMITTAL REGISTER been printed?	____	____

SAMPLE BIDDING SCHEDULE SUGGESTED FOR SMALL PROJECTS AND PROJECTS WITH MINOR SITE WORK AND UTILITIES

SECTION 00010
SUPPLIES OR SERVICES AND PRICES/COSTS

SCHEDULE

MUNITION STORAGE FACILITY
POPE AIR FORCE BASE, NORTH CAROLINA

TOTAL BASE BID (ITEMS 0001 AND 0002) ---------- $_____

TOTAL BASE BID PLUS ADDITIVE NO. I
(ITEMS 1 THROUGH 3) ---------- $_____

ITEM	DESCRIPTION	QUANTITY	U/M	U/P	AMOUNT
0001	BASE BID - Construction of Storage Igloos (1 and 2) to the 5-Foot Building Line, Complete	1	LS	XXXXX	_____.__
0002	BASE BID - Site Preparation and Development, Including Utilities, Complete	1	LS	XXXXX	_____.__
0003	ADDITIVE NO. I - Construction of Flammable Storage Building to the 5-Foot Line, Complete	1	LS	XXXXX	_____.__

END OF SECTION 00010

SAMPLE BIDDING SCHEDULE SUGGESTED FOR LARGER PROJECTS

SECTION 00010
SUPPLIES OR SERVICES AND PRICES/COSTS

SCHEDULE

PAVING OF EXISTING ROADS AND PARKING AREAS
CLARKS HILL DAM AND LAKE
SAVANNAH RIVER
GEORGIA AND SOUTH CAROLINA

TOTAL BID (ITEMS 0001 THROUGH 0002E) ---------- $_____

ITEM	DESCRIPTION	QUANTITY	U/M	U/P	AMOUNT
0001	Paving of Existing Roads and Parking Areas - Petersburg Recreation Area:				
0001A	1-1/2 Inch Thick Bituminous Course	13,000	SY	_____.__	_____.__
0001B	6-Inch Thick Graded Crushed Aggregate Base Course	13,000	SY	_____.__	_____.__
0001C	Lower Subgrade 6 Inches	6,240	SY	_____.__	_____.__
0002	Paving of Existing Roads and Parking Areas - Winfield Recreation Area:				
0002A	Bituminous Pavement Leveling	17,920	SY	_____.__	_____.__
0002B	1-1/2 Inch Thick Bituminous Pavement Overlay	17,920	SY	_____.__	_____.__
0002C	1-1-1 Inch Thick Bituminous Pavement on Completed Base Course	1,680	SY	_____.__	_____.__
0002D	6-Inch Thick Graded Crushed Aggregate Base Course	6,240	SY	_____.__	_____.__
0002E	Remove and Repair Existing Pavement	1	LS	XXXXX	_____.__

END OF SECTION 00010

SAMPLE BIDDING SCHEDULE SUGGESTED FOR LARGER PROJECTS
WITH MULTIPLE ADDITIVES

SECTION B
SUPPLIES OR SERVICES AND PRICES/COSTS

SCHEDULE

GENERAL INSTRUCTION FACILITIES
U.S. ARMY SOLDIER SUPPORT INSTITUTE AND
MARION AVENUE WIDENING
FORT JACKSON, SOUTH CAROLINA

TOTAL BASE BID - ITEMS 0001 THROUGH 0004 ---------$_____

TOTAL BASE BID PLUS ADDITIVE NO. 0001
ITEMS 0001 THROUGH 0005 ---------- $_____

TOTAL BASE BID PLUS ADDITIVES NOS. 0001 AND 0002
ITEMS 0001 THROUGH 0006 ---------- $_____

TOTAL BASE BID PLUS ADDITIVES NOS. 0001 THROUGH 0003
ITEMS 0001 THROUGH 0007 ---------- $_____

ITEM	DESCRIPTION	QUANTITY	U/M	U/P	AMOUNT
0001	BASE BID - U.S. Army Soldier Support Institute Facility with Metal Roof, Complete to the 5-Foot Building Line	1	LS	XXXXX	_____.__
0002	BASE BID - Site Preparation and Development, Utilities and Parking Lots for the Soldier Support Institute Facility, Complete	1	LS	XXXXX	_____.__
0003	BASE BID - Marion Avenue Widening Including Landscaping and Utilities, Complete	1	LS	XXXXX	_____.__
0004	BASE BID - Install Government-Furnished Interior Furnishings, Complete	1	LS	XXXXX	_____.__
0005	ADDITIVE NO. I - Changing Room, Complete	1	LS	XXXXX	_____.__

ITEM	DESCRIPTION	QUANTITY	U/M	U/P	AMOUNT
0006	ADDITIVE NO. II - Auditorium Roof Deck, Complete	1	LS	XXXXX	_____.__
0007	ADDITIVE NO. III - Sodding, Complete	1	LS	XXXXX	_____.__

END OF SECTION 00010

SCOPE OF WORK

The site of work is located in Houston County, Georgia, at Robins Air Force Base and includes the following principal features and approximate quantities:

(a) Construction of a gymnasium containing approximately 10,000 square feet of floor space, consisting of concrete floor slabs, concrete frame, concrete masonry unit walls, open web steel joists, steel deck and built-up roofing. Interior work includes plumbing, heating, air conditioning, and electrical work. Gymnasium to be furnished with miscellaneous gymnasium equipment.

(b) Gas line - 500 feet of 1-1/2 inch pipe.

(c) Water line - 400 feet of 3-inch pipe; 3-inch gate valve; connection to existing 10-inch line.

(d) Sanitary sewer - 285 feet of 6-inch pipe; 1 manhole.

(e) Sprigging - 1.6 acres.

(f) Landscaping for the gymnasium building.

(g) Exterior electrical work.

(h) Clearing and grubbing, including removal of portable wooden bleachers (16' x 74') - 2.9 acres.

(i) Unclassified excavation - 1,500 cubic yards.

(j) Unclassified borrow - 500 cubic yards.

(k) 1-1/2 inch flexible pavement, including tack and prime coats and 7-1/2 inch stabilized aggregate base course - 700 square feet.

(l) 4-inch concrete sidewalk - 500 square yards.

(m) 6-inch asphalt concrete curb - 50 linear feet.

(n) Precast concrete bumper curbs - 13 each.

(o) 4-inch printed stripes - 150 linear feet.

(p) Storm drainage system - 6-inch pipe - 72 linear feet
8-inch pipe - 202 linear feet
10-inch pipe - 58 linear feet

The cost of this work is estimated to be between $1,000,000 and $5,000,000. Construction duration for this project is estimated to be 360 days.

AMENDMENT PREPARATION - ELECTRONIC BID SET

Solicitation Number DAC_21-99-B-0___, Bid Opening [1100] [1400] [1500] hours Local Time at Place of Bid Opening __/__/99 for _____

_____

_____, is modified in the following respects:

A. SPECIFICATIONS: The revised and added sections listed below (Revised and Added by Amendment No. 0000) are hereby added to and made a part of the solicitation. In the technical provisions, revised or added information is underlined and deleted information is struck out. Deleted sections are also listed.

[INTERNET ONLY AMENDMENT]
No paper copies of amended or added documents will be available to the bidders but may be accessed and downloaded on the internet at: http://www.sas.usace.army.mil/ebs/. Amendment narrative and revised drawings are located under "Amendment." Amended specifications are located under "Plans and Specifications." [Revisions can be located in the appropriate volume of specifications by searching for an asterisk and amendment number (i.e., *1).] [Revisions can be located in the appropriate volume of specifications by searching for an asterisk and amendment number (i.e., *1) except on ENG Form 4288. ENG Form 4288 cannot be annotated with the amendment number.]

[CD AMENDMENT]
No paper copies of amended or added documents will be available to the bidders. A CD reflecting the amendment revisions will be issued to the bidders. Amendment narrative only is under contract viewer amendment icon. Amended specifications and drawings are found under the applicable contract viewer icon (i.e. hardhat icon for specifications).

Documents may also be accessed and downloaded on the internet at http://www.sas.usace.army.mil/ebs/. Amended specifications are located under "Plans and Specifications." Revisions can be located in the appropriate volume of specifications by searching for an asterisk and amendment number (i.e., *1)[, except on ENG Form 4288. ENG Form 4288 cannot be annotated with the amendment number

Revised Sections Added Sections Deleted Sections

(THIS PORTION IS FILLED OUT BY A-E)

THE FOLLOWING IS FILLED OUT BY THE A-E TO INDICATE DRAWING CHANGES.

B. DRAWING FILE NO. _____:

(1) CIVIL: Sheets __, __, __, __, __, and __ dated _____ are hereby added to and made a part of the contract drawings.

(a) Sheets __, __, __, __, __, and __ with Revision No. 1 dated _____ are hereby added to and made a part of the contract drawings.

(b) Sheets __, __, __, __, __, and __ are hereby reissued for clarity.

(c) Delete Sheets _____
in their entireties.

(2) BUILDING/DISCIPLINE:

(a) Sheets __, __, __, __, __, and __ dated _____ are hereby added to and made a part of the contract drawings.

(b) Sheets __, __, __, __, __, and __ with Revision No. 1 dated _____ are hereby added to and made a part of the contract drawings.

(c) Sheets __, __, __, __, __, and __ are hereby reissued for clarity.

(d) Delete Sheets _____
in their entireties.

[B. DRAWINGS: There are no drawing revisions issued with this amendment.]

NOTE:

CONTACT YOUR PROJECT MANAGER FOR AMENDMENT NUMBERS AND DATE FOR REVISION BLOCK.

THE EXAMPLES SHOWN ABOVE SHOULD COVER ANY SITUATION THE AMENDMENT WILL REQUIRE. IF ADDITIONAL INFORMATION OR CLARIFICATION IS REQUIRED PLEASE CONTACT YOUR PROJECT MANAGER.

AMENDMENT PREPARATION - PAPER JOBS (NON EBS)

Solicitation Number DAC_21-99-B-0___, Bid Opening [1100] [1400] [1500] hours Local Time at Place of Bid Opening __/__/99 for _____

_____

_____, is modified in the following respects:

[A. SPECIFICATIONS: The revised and added pages listed below (Revised and Added by Amendment No. 000_) are hereby added to and made a part of the solicitation. Technical Provision pages have an asterisk in the right margin which indicates line in which a revision was made. Deleted pages are also listed.]

[A. SPECIFICATIONS: The revised and added pages listed below (Revised and Added by Amendment No. 000_) are hereby added to and made a part of the solicitation. In the technical provisions, revised or added information is indicated by shaded areas and deleted information is indicated by struck out areas. Deleted pages are also listed.]

Section	Revised Pages	Added Pages	Deleted Pages

(THIS PORTION IS FILLED OUT BY A-E)

THE FOLLOWING IS FILLED OUT BY THE A-E TO INDICATE DRAWING CHANGES.

B. DRAWING NO. _____:

(1) Enclosed Sheets __, __, __, __, __, and __ dated _____ are hereby added to and made a part of the contract drawings.

(2) Enclosed Sheets __, __, __, __, __, and __ with Revision No. 1 dated _____ are hereby added to and made a part of the contract drawings.

(3) Enclosed Sheets __, __, __, __, __, and __ are hereby reissued for clarity.

(4) Delete Sheets _____ in their entireties.

[B. DRAWINGS: There are no drawing revisions issued with this amendment.]

NOTE:

CONTACT YOUR PROJECT MANAGER FOR AMENDMENT NUMBERS AND DATE FOR REVISION BLOCK.

THE EXAMPLES SHOWN ABOVE SHOULD COVER ANY SITUATION THE AMENDMENT WILL REQUIRE. IF ADDITIONAL INFORMATION OR CLARIFICATION IS REQUIRED PLEASE CONTACT YOUR PROJECT MANAGER.

EXAMPLE MODIFICATION SCOPE OF WORK

Modification of Specifications
Solicitation Number DACA21-95-B-0110
Contract No. DACA21-96-C-0029
Modificaton No. MCB96-29-D

U.S. ARMY ENGINEER DISTRICT, SAVANNAH
CORPS OF ENGINEERS
100 WEST OGLETHORPE AVENUE
SAVANNAH, GEORGIA 31402-0889
10/23/95

The Specifications and Drawings for Construction of EM Barracks Complex - Fort Gordon, Georgia, under Contract Number DACA21-95-C-0029, are modified as follows:

A. SPECIFICATIONS:

The new and revised pages listed below (Revised and Added by Modification 96-29-D are hereby added to and made a part of the Contract Specifications. An asterisk in the right margin of revised pages indicates each line in which a revision was made.

Section	Revised Pages	Added Pages
08700		1a
09510	2	

B. DRAWING NO. 71-08-09:

Sheet 53 with Revision No. 1 and new Sheets 53A, 53B, 53C and 53D (Added by MCB 96-29-D) all dated 23 October 1995 are hereby added to and made a part of the contract drawings.

Encls
Specs (2 pages)
Dwgs as listed in Para B above
(Revised and Added by MCB 96-29-D)

CHAPTER A-12

ASBESTOS AND OTHER HAZARDOUS MATERIALS (IDENTIFICATION, HANDLING AND REMOVAL)

INDEX

12.1 GENERAL
- 12.1.1 Scope
- 12.1.2 Overview
- 12.1.4 A-E Responsibilities for Asbestos
- 12.1.5 A-E Responsibilities for Hazardous Materials
- 12.1.6 Site Visit

12.2 APPLICABLE PUBLICATIONS

12.3 PRECONCEPT SUBMITTAL REQUIREMENTS

12.4 CONCEPT/EARLY PRELIMINARY (35 PERCENT) DESIGN SUBMITTAL REQUIREMENTS

12.5 PRELIMINARY (60 PERCENT) DESIGN SUBMITTAL REQUIREMENTS
- 12.5.1 Preliminary Design Analysis
- 12.5.2 Preliminary Drawings

12.6 FINAL (100 PERCENT) DESIGN SUBMITTAL REQUIREMENTS
- 12.6.1 Final Design Analysis
- 12.6.2 Final Drawings
- 12.6.3 Final Specifications

12.7 CORRECTED FINAL DESIGN SUBMITTAL REQUIREMENTS
- 12.7.1 Notice
- 12.7.2 Compliance

12.8 ESTIMATE

12.9 FEE PROPOSAL

CHAPTER A-12

ASBESTOS IDENTIFICATION AND REMOVAL

12.1 **GENERAL**.

12.1.1 Scope. This chapter identifies the Architect-Engineer's (A-E's) responsibility for determining the existence of asbestos and other regulated hazardous materials (HMs) including mercury and polychlorinated biphenyl articles (PCBs), radioactive materials or biohazards, and implementing the safeguards for removal. (See Chapter A-13 for lead and lead based paint guidance.) Whenever asbestos containing material (ACM), or other HM is reported by the using military installation (Director of Engineering and Housing (DEH), Base Civil Engineer (BCE) or is discovered by the A-E during a field visit, the A-E shall incorporate the provisions of this chapter into the design documents. Unless the using agency can provide specific locations, types, and quantities of asbestos through recent (< 2 years old) survey report of analytical sampling and testing results with the DD Form 1391, other programming documents or supplemental data at the Predesign Conference, the A-E shall be responsible for determining the actual existence and/or nonexistence of asbestos on all renovation, rehabilitation or demolition projects. All previous asbestos sampling and analysis must meet the state's current requirements and the requirements of this chapter. Unless verification is made otherwise hazardous materials will be assumed present in all buildings built prior to 1980. Acceptable verification includes the assumption of the hazardous compound's present by visual inspection by the A-E for fluorescent light tubes (mercury), light ballast, switches, manometer switches (mercury) and similar switches and controls with a history of containing hazardous compounds. Negative presence will require representative sampling of similar materials. The A-E will include building history (construction dates) with submittal. A-E firms that indicate an inability to determine the existence of asbestos (or other HM's) or implement safeguards for its removal due to insurance restrictions shall inform the Savannah District in writing at the submittal of the initial fee proposal. Asbestos (or other HMs) survey and abatement when required will be accomplished independently by the Savannah District for incorporation into the construction documents.

12.1.2 Overview. Exposure to airborne asbestos has been associated with four diseases: lung cancer, gastrointestinal cancers, pleural or peritoneal mesothelioma, and asbestosis. Other regulated hazardous materials cause health problems. Mercury is a poison and causes several health problems that can lead to death. The Environmental Protection Agency and the Occupational Safety and Health Administration have adopted regulations requiring control procedures for asbestos, lead, mercury and PCBs. These regulations also provide guidance to ensure safe working conditions and disposal during demolition or renovation of buildings or structures. These procedures apply to any work that involves material which contains asbestos (or other HM's). Examples of materials which may contain or be covered by asbestos are as follows:

a. piping
b. ducts
c. boilers
d. turbines

e. furnaces
f. walls, ceilings, floor tiles, roofing, siding, glazing, caulking
g. sprayed on acoustic and/or fireproofing materials
h. textiles such as gasket rope, curtains, etc.
i. soil
j. vibration control mats

12.1.3 A-E Designer Requirements. The A-E shall comply with the provisions of this chapter for design purposes where the conditions indicate asbestos (friable and nonfriable) or other hazardous materials are to be encountered:

12.1.3.1 A-E Asbestos Designer Requirements The asbestos designer or consultant, and inspectors/samplers shall have attended an initial designers/inspectors training course and have successfully passed the examination. Annual refresher training with a successfully completed examination shall also be required. The designer and inspectors shall also be certified and licensed in the state in which the work is to be performed (e.g. state of North Carolina per state requirements if the project is in North Carolina.) Copies of all licenses shall be submitted and all related documents are to be signed with license numbers included with the signatures. The A-E shall comply with the provisions of this chapter for design purposes where the following conditions indicate asbestos (friable or nonfriable) are likely to be encountered:

a. If the site is found to be or suspected of being asbestos contaminated and is to be demolished or renovated,

b. If the ACM will be drilled, scraped, sanded, cut through, or penetrated, (such as encountered in replacing HVAC systems on roofs) thereby releasing asbestos or

c. If any ACM will be enclosed or encapsulated.

12.1.3.2 A-E Hazardous Materials Designer Requirements. The designer or consultant shall have demonstrated advanced knowledge in the handling and disposal of hazardous materials. This requirement may be documented by having a baccalaureate degree related to hazardous chemical compounds, such as Toxicology, Public Health, or Chemical Engineering; or who has taken and passed examinations for certification programs such as a Certified Industrial Hygienist (CIH), Certified Industrial Hygiene Technician (CIHT), Certified Hazardous Materials Manager (CHMM), Certified Safety Professional (CSP) Certified Health Physicist (CHP) or who has had and can document extensive related training by a reputable state or acceptable training agency. The designer shall also meet any certification and license required by the state in which the work is to be performed. Copies of all licenses, degrees, or certifications shall be submitted as per section 12.4b and all related documents are to be signed by the designer with license or certification numbers included with the signatures. The A-E shall comply with the provisions of this chapter for design purposes where the following conditions indicate hazardous materials are to be encountered:

a. If the site is found to be or suspected of containing articles contaminated with hazardous materials and is to be demolished or renovated (lights, light fixtures, electrical or

manometer switches, excessive bird droppings or other biological wastes, radioactive source detectors),

b. If the hazardous material is to be removed and disposed of has potential for it's containment to be accidentally breached during renovations or is a material that must be disinfected or cleaned prior to renovation or demolition, thereby releasing it or

c. If any onsite hazardous material will be enclosed or encapsulated in-place by the renovation.

12.1.4 A-E Responsibilities for Asbestos. Demolition of asbestos material without Environmental Protective Agency (EPA) notification and improper work practices can result in a $10,000 per day fine being levied on both the building owner and Contractor. The Guide Specification CEGS-13280 is written so that the construction contractor will be required to provide the written notifications and report to the EPA. In some states this function has been taken over by an approved state agency and notification will follow the requirements of the states to fulfill the EPA notification clause. It is the A-E's responsibility to determine existence and location of asbestos material, to prepare contract documents recommending methods of disposing of the ACM and HMs, and to prepare an estimate of construction cost relating to the recommended methods.

12.1.5 A-E Responsibilities for Hazardous Materials. Demolition of buildings or structures without removal of hazardous materials result in a violation of Federal and state OSHA requirements related to worker overexposure; violation of Department of Transportation hazardous materials transportation and shipping laws, or EPA/state landfill disposal laws. Although there are no guide specifications expressly written for each hazardous material that may be encountered, the A-E is responsible for determining the existence and location of hazardous materials, for preparing contract documents, recommending methods of removing and disposing of the hazardous materials, and for preparing an estimate of construction costs relating to the recommended methods. The A-E may wish to develop an appropriate specification, or may include such information in the Demolition specification (CEGS-02220). The A-E shall ensure that all methods meet Federal, State, and local requirements for the handling and disposing of hazardous materials, and that "cradle to grave" tracking is maintained.

12.1.6 Site Visit.

12.1.6.1 The A-E, meeting the requirements in 12.1.3.1 and 12.1.3.2, or his asbestos/hazardous material consultant, shall perform a site investigation to determine the existence, physical condition and location of asbestos and hazardous materials. The site visit shall include the taking of bulk samples from suspected locations and perform any necessary exploratory work on the site, using good engineering judgement. Asbestos surveys shall be performed using general procedures and protocols appearing in EPA 40 CFR, part 763, dated October 30, 1987 (AHERA Protocols).

12.1.6.2 In obtaining the samples for testing, the A-E shall follow all OSHA/EPA/NIOSH safety requirements for personal and public safety, and must insure that the disturbed area will not increase the hazard from release of asbestos fibers or hazardous materials.

12.1.6.3 A sufficient number of samples shall be analyzed to cover all suspect materials. Areas that cannot be sampled due to a “non destructive” clause, shall be noted in the asbestos and HMs survey. Bulk asbestos samples with 1 percent (by volume) or greater contamination shall be considered asbestos containing material (ACM), and that material shall be designated for removal, enclosure or encapsulation.

12.1.6.4 A sufficient number of samples shall be analyzed to cover all suspect hazardous materials. Areas that cannot be sampled due to a “non destructive” clause, shall be noted in the hazardous materials survey report or detailed in a letter of findings to the Project Manager. Equipment or objects (ballasts, lights, switches) that contain hazardous materials shall be removed from the building or structure as intact as possible. Biohazards, such as potentially infectious guano, may require bio-sampling and analysis. The presence of live animals may require live trapping and release (bats, snakes, birds, etc.) before waste materials can be removed. The materials shall be removed intact prior to a demolition and cleaned prior to a renovation. Large areas, such as laboratories, process/research and development areas that are suspected to be contaminated with chemical compounds, may require special testing, removal and disposal of all effective furnishings and building components prior to general demolition or renovation.

12.1.6.5 The A-E shall immediately notify the Savannah District Project Manager of any hazardous material or highly friable, contaminated occupied areas that pose an immediate threat to the health of the occupants. A written notification shall immediately follow.

12.1.6.6 Nonfriable materials containing asbestos may not require testing, special handling, or disposal procedures unless such materials are to be sawed, pulverized, or handled in such a manner that will cause dust and asbestos fibers to be released. These items must be identified and quantified in the asbestos report.

12.1.6.7 Asbestos bulk samples shall be sent to a laboratory for testing to determine percent of asbestos, type of asbestos, and binding material, and the results documented with the Preliminary Design Analysis. Polarized light microscopy (PLM) analysis will be specified for initial screening. Analysis of floor tile and other resinously bound materials by the PLM method (EPA/600/R-93/116, July 1993) may yield false negative results because of method limitations in separating closely bound fibers and in detecting fibers of small length and diameter. Therefore, a qualitative assessment of vinyl floor tile, mastics, and some grouts shall be done by the transmission electron microscopy (TEM) method. The qualitative analysis of vinyl tile and other materials by TEM shows that asbestos is either present in high portions or not present in detectable quantities. Floor tile qualitative TEM results shall be reported as "> 1 percent asbestos," "< 1 percent asbestos, trace," or "no asbestos detected." By specifying qualitative analysis for floor tile, considerable cost savings should be realized over the quantitative assessment by the TEM method.

12.1.6.8 Laboratory Accreditation.

12.1.6.8.1 Laboratories performing bulk asbestos analyses must utilize U.S.EPA’s “Interim Method for the Determination of Asbestos in Bulk Insulation Samples” as found in 40 CFR Part 763, Subpart F, App. A. A or the current EPA method for the analysis of asbestos in building material. Analyzing laboratories shall participate in the AIHA/NIOSH Bulk Asbestos Proficiency Analytical Testing (BAPAT) Program and shall have participated in at least 50

percent of the rounds within the last year and scored 90 percent or better. Details on BAPAT applications can be found on the Web at http://www.aiha.org or call (703) 849-8888.

12.1.6.8.2 All laboratories which analyze samples or materials (metals, silica, asbestos, and solvents) for the purposes of evaluating workplace exposures or contaminants shall be accredited under the AIHA Industrial Hygiene Laboratory Accreditation Program (IHLAP). The laboratories, as a part of the IHLAP accreditation, shall successfully participate in the AIHA/NIOSH Proficiency Analytical Testing (PAT) Program and shall have participated in at least 50 percent of the rounds within the last year and scored 90 percent. Details on accreditation applications can be found on the Web at http://www.aiha.org. All fiber- counting analysts using the phase contrast microscopy method (PCM) must have successfully completed a NIOSH 582 course.

12.1.6.8.3 All laboratories performing analysis of microorganisms commonly detected in air, fluids, and bulk samples shall be accredited under the Environmental Microbial Laboratory Accreditation Program (EMLAP). Proof of continued participation and competency in the AIHA Environmental Microbiology Proficiency Testing (EMPAT) is required.

12.1.6.8.4 Proof of AIHA accreditation under the Laboratory Quality Assurance Program (LQAP) shall be required. Each location and type of lab, (Fixed Site, Mobile Facility and Field Operation) shall have a separate accreditation. Details on accreditation applications can be found on the Web at http://www.aiha.org or call (703) 849-8888.

12.1.6.9 Survey Reports: The asbestos survey report shall contain single line floor plan sketches of the buildings and rooms, showing where samples were taken, indexed schedule of samples surveyed with the sample number and other pertinent notes, and a narrative on methodology of survey. The laboratory bulk sample report numbers will be correlated with the samples taken. Drawings shall be compatible in scale with all other drawings unless otherwise noted.

12.1.5.10 The presence (or absence) of other suspected hazardous materials shall be verified by similar applicable methods discussed above.

12.2 **APPLICABLE PUBLICATIONS**. The most current editions of the publications listed below constitute an addendum to this chapter wherever referenced or applicable.

Federal Standards No. 313A

NIOSH The National Institute for Occupational Safety and Health
Manual of Analytical Methods, Physical and Chemical Analysis
Method

OSHA The Occupational Safety and Health Administration

29 CFR 1910.1001, 29 CFR 1910.134, 29 CFR 1910.1200
29 CFR 1926.58, 29 CFR 1926.1101

EPA Environmental Protection Agency

40 CFR 61 Subpart A & M
40 CFR Part 763, Oct 30, 1987
EPA/600/r-93/116, July 1993

COE Guide Specification CEGS-13280

EFARS 52.2/9009

Note: The above referenced agencies may be contacted at the following addresses:

a. The National Institute for Occupational Safety and Health
CDC-NIOSH
Building J, N.E., Room 3007
Atlanta, Georgia 30333

b. The Occupational Safety and Health Administration
200 Constitution Avenue
Washington, D.C. 20210

c. Environmental Protection Agency
401 M Street, S.W.
Washington, D.C. 20460

d. The Corps of Engineers
Huntsville Engineering and Support Center
http://www.hnd.usace.army.mil

12.3 **PRECONCEPT SUBMITTAL REQUIREMENTS**. The A-E shall collect and evaluate all existing sampling data, records of removal, encapsulation, or enclosure of all known asbestos and hazardous materials. The A-E shall then prepare and submit a summation of known acceptable data and areas of no data or unacceptable data. It shall be the responsibility of the A-E to then prepare a schedule of when the data gaps will be filled (by site visits, surveys, etc.) This shall be presented in a tabular form.

12.4 **CONCEPT/EARLY PRELIMINARY (35 PERCENT) DESIGN SUBMITTAL REQUIREMENTS**. The Concept/Early Preliminary Design Submittal shall include the following:

a. Criteria listings - standards, manuals, and all applicable references which will be used in developing the specification.

b. Asbestos and hazardous materials survey report. The report shall include a description of findings in text and tabular form, following AHERA guidelines for physical condition and damage assessments. The report shall include all analytical support data such as field notes and chain of custody receipts. Technicians must sign all sampling documents, analytical results, and chain of custody receipts. In North Carolina (and any other states that require a professional or licensed oversight person), the report shall be

signed by the CIH (or applicable professional). Sample locations shall correlate to site drawings. Drawings shall be compatible and to scale with all other site drawings. Text and drawings shall be submitted in hard copy and project compatible electronic format. All test methods and procedures shall be described and referenced. Areas unable to be sampled shall be noted and the reason given.

c. Written notification shall be made of any highly friable or damaged asbestos and asbestos contaminated areas that pose an immediate threat to the health of the occupants.

d. Certification and experience of A-E or consultant and all personnel performing asbestos and hazardous material sampling and abatement design shall be submitted. The function of each person shall be described with his/her certifications attached. All copies must be legible.

e. Name and certification of the asbestos/hazardous materials testing laboratory shall be submitted. See Section 12.1.6.8 Laboratory Accreditation.

f. Submit a narrative describing anticipated scope of work based upon survey findings. (Document building relative to making assumptions, including original construction date).

12.5 **PRELIMINARY (60 PERCENT) DESIGN SUBMITTAL REQUIREMENTS**.

12.5.1 Preliminary Design Analysis. In the event that 35 percent and 60 percent submittals are combined, requirements for both shall be met in one submittal. The COE project manager may request that the asbestos or hazardous materials survey be submitted separately from standard submittal dates for COE review in order to prevent design complications from unexpected materials discoveries.

12.5.1.1 The Preliminary Design Analysis shall include all items contained in the Concept/Early Preliminary Design submittal and any necessary changes as required. The A-E shall address and annotate all comments. Responses shall be grouped by reviewer and include reviewer's name, the question or comment, the A-E's response, and where in the text or drawing the changes were made.

12.5.1.2 The A-E shall furnish certified laboratory test results with the project Preliminary Design Analysis verifying the existence of asbestos by type, concentration level (in percent), location, condition, and binder type (including percent). The analysis of vinyl floor tile and mastics are an exception as noted earlier. Qualitative TEM analysis of bulk sample test results shall be reported as ">1 percent asbestos," "<1 percent asbestos, trace," or "no asbestos detected." Negative test reports are also required.

12.5.2 Preliminary Drawings.

12.5.2.1 Drawing(s) shall be submitted at Preliminary for all projects or portions thereof which contain asbestos (or other HM).

12.5.2.2 The A-E shall provide demolition or renovation drawing(s) which show(s) any asbestos abatement work. Each drawing shall indicate the location of all HMs and type of the asbestos with enough detail so that quantities can be estimated. Drawings shall contain markings based upon the type and location of the various materials found. A detailed key of notes shall be included.

12.5.2.3 The drawings shall include a schedule of occupancy phasing, (if applicable).

12.5.2.4. In crawl spaces, where the dirt floor has been contaminated with asbestos, the A-E shall indicate the area of dirt to be removed to a minimum of 25 mm (1 inch) depth or greater as deemed necessary, and whether the material is friable or nonfriable.

12.5.2.5 Plate numbers will carry an "R-" prefix for asbestos abatement. Work related to other HMs may be located on "R" plates or elsewhere as is feasible.

12.5.2.6. If part of a larger set of drawings, all asbestos drawings shall be grouped together immediately following the site development drawings. Sheet and ring numbers shall follow sequentially with the other drawings in the set.

12.6 **FINAL (100 PERCENT) DESIGN SUBMITTAL REQUIREMENTS**.

12.6.1 Final Design Analysis. The Final Design Analysis shall be a refinement of the Concept/Early Preliminary Submittal and the Preliminary Design Analyses. If the Preliminary stage is not required, the Final Design Analysis shall include all items required in paragraphs 12.4 and 12.6.1.

12.6.2 Final Drawings.

12.6.2.1 Final plans will be the refinement and completion of preliminary drawings. All comments from this office relating to concept and preliminary design shall be incorporated in the final drawings.

12.6.2.2 Where crowded conditions exist, sufficient sections and elevations will be shown to indicate clearly the exact location of the asbestos in relation to other items.

12.6.2.3 The number of floor plans, elevations, and details will be sufficient to enable the Contractor to perform a detailed estimate.

12.6.3 Final Specifications

12.6.3.1 Guide Specification, CEGS-13280 ASBESTOS ABATEMENT, will be used as a guide for demolition and renovation projects which require asbestos abatement by removal, encapsulation, or enclosure. Guide specification, CEGS-02050, Demolition, will be used where applicable.

12.6.3.2 A copy of the "Asbestos Survey Report" shall be included as an appendix to the Asbestos specification. A copy of the survey report for other HMs shall be included in the documents where applicable.

12.6.3.3 The A-E shall include both marked-up draft and final typed specifications in the Final Design submittal package.

12.7 **CORRECTED FINAL DESIGN SUBMITTAL REQUIREMENTS**.

12.7.1 Notice. Corrected Final submittals are not considered a normal design level and are required only when Final submittals must be revised or corrected due to error or omission.

12.7.2 Compliance. The comments generated during the Final Design review shall be incorporated in the Corrected Final submittal.

12.8 **ESTIMATE**. In preparing the Project Estimate, the costs of the asbestos abatement will be identified as a separate item for the quantity of asbestos involved. The Project Estimate shall include a detailed breakdown or backup data in the estimate for cost of the asbestos and/or hazardous material professional (CIH, CSP, CHP, CHMM, etc.) for the project, permit filing costs, air and final cleanup sampling and laboratory analysis costs, labor cost for abatement work for each of the major types of materials involved, transportation costs, and disposal costs. The costs relative to handling other HMs shall be estimated in similar manner as described for asbestos.

12.9 **FEE PROPOSAL**. The A-E's fee proposal shall identify the material sampling and laboratory test analysis as a separate item.

CHAPTER A-13

LEAD HANDLING AND REMOVAL

INDEX

13.1 GENERAL
- 13.1.1 Scope
- 13.1.2 Overview
- 13.1.3 Architect-Engineer Designer Requirements
- 13.1.4 Architect-Engineer Responsibilities
- 13.1.5 Site Visit

13.2 APPLICABLE PUBLICATIONS

13.3 PRECONCEPT SUBMITTAL REQUIREMENTS

13.4 CONCEPT/EARLY PRELIMINARY (35 PERCENT) DESIGN SUBMITTAL REQUIREMENTS

13.5 SIXTY PERCENT (60 PERCENT) SUBMITTAL REQUIREMENTS

13.6 PRELIMINARY (60 PERCENT) DESIGN SUBMITTAL REQUIREMENTS
- 13.6.1 Preliminary Design Analysis
- 13.6.2 Preliminary Drawings

13.7 FINAL (100 PERCENT) DESIGN SUBMITTAL REQUIREMENTS
- 13.7.1 Final Design Analysis
- 13.7.2 Final Drawings
- 13.7.3 Final Specifications

13.8 CORRECTED FINAL DESIGN SUBMITTAL REQUIREMENTS
- 13.8.1 Notice
- 13.8.2 Compliance

13.9 ESTIMATE

13.10 FEE PROPOSAL

CHAPTER A-13

LEAD HANDLING AND REMOVAL

13.1 GENERAL.

13.1.1 Scope. This chapter identifies the Architect-Engineer's (A-E's) responsibility for determining the existence of asbestos (and other regulated hazardous materials, HM's including lead and PCB's) and implementing the safeguards for its removal. Whenever asbestos containing material (ACM), or other HM is reported by the using military installation (Director of Engineering and Housing (DEH) or Base Civil Engineer (BCE) or is discovered by the Architect-Engineer during a field visit, the Architect-Engineer shall incorporate the provisions of this chapter into the design documents. Unless the using agency can provide location and quantities of asbestos through recent survey report of analytical sampling and testing results with the DD Form 1391, other programming documents, or supplemental data at the Predesign Conference, the A-E shall be responsible for determining the actual existence and/or nonexistence of asbestos on all renovation, rehabilitation, or demolition projects. Hazardous materials will be assumed present in all buildings built prior to 1980, unless verification is made otherwise. A-E will report building history (construction dates) with submittal. A-E firms that indicate an inability to determine the existence of asbestos (or other HM's) or implement safeguards for its removal due to insurance restrictions shall inform the Savannah District in writing at the submittal of the initial fee proposal. Asbestos (or other HM's) survey and abatement may then be accomplished independently by the Savannah District for incorporation into the construction documents.

13.1.2 Overview. Exposure to airborne asbestos has been associated with four diseases: lung cancer, gastrointestinal cancers, pleural or peritoneal mesothelioma, and asbestosis. Other regulated hazardous materials cause health problems. Lead is a poison and causes several health problems and can be deadly. The Environmental Protection Agency and the Occupational Safety and Health Administration have adopted regulations requiring control procedures of asbestos, lead, and PCB's and to ensure safe working conditions during demolition or renovation of buildings or structures. These procedures apply to any work that involves material which contains asbestos (or other HM's). Examples of materials which may contain or be covered by asbestos are as follows:

a. piping
b. ducts
c. boilers
d. turbines
e. furnaces
f. walls, ceilings, floor tiles, roofing, siding
g. sprayed on acoustic and/or fireproofing materials
h. textiles such as gasket rope, curtains, etc.
i. soil

Lead may be contained in paint as well as, in soil and pavement where leaded gasoline was exposed, PCB's may be in light fixtures ballasts and in generators.

13.1.3 A-E Designer Requirements. The designer or consultant shall have attended a designers training course and successfully passed the examination. The designer shall also be certified in the State of North Carolina per state requirements if the project is in North Carolina. The A-E shall comply with the provisions of this chapter for design purposes where the following conditions indicate asbestos (friable or nonfriable) is to be encountered:

a. If the site is found to be or suspected of being asbestos contaminated and is to be demolished or renovated,

b. If the asbestos (and/or lead based paint, LBP) onsite will be drilled, scraped, cut through, or penetrated, thereby releasing asbestos (and/or lead), or

c. If any onsite asbestos will be enclosed or encapsulated.

d. If removal of PCB contained light fixtures or generators is required.

13.1.4 A-E Responsibilities. Demolition of asbestos material without Environmental Protective Agency (EPA) notification and improper work practices can result in a $10,000 per day fine being levied on both the building owner and Contractor. The CEGS 02080 is written so that the construction contractor will be required to provide the written notifications and report to the EPA. It is the Architect-Engineer's responsibility to determine existence and location of asbestos material, to prepare contract documents recommending methods of disposing of the asbestos, (lead, or PCB) hazard(s), and to prepare an estimate of construction cost relating to the recommended methods.

13.1.5 Site Visit.

13.1.5.1 The A-E with professional experience, or his consultant certified in the Comprehensive Practice of Industrial Hygiene (C.I.H.) and having specialized experience in sampling for asbestos, will perform a site investigation to determine the existence and location of asbestos material and shall take bulk samples from suspected locations and do any necessary exploratory work on the site, using good engineering judgement.

13.1.5.2 In obtaining the samples for testing, the A-E shall follow all OSHA/NIOSH safety requirements for personal and public safety, and insure that the disturbed area will not increase the hazard from release of asbestos fibers.

13.1.5.3 A sufficient number of samples shall be analyzed to cover all suspect materials. Samples with 1 percent or greater contamination by weight of asbestos shall be considered asbestos containing material (ACM), and that material shall be designated for removal, enclosure, or encapsulation.

13.1.5.4 The A-E shall notify the Savannah District Project Manager immediately, followed up in writing of any highly friable, contaminated, occupied areas which pose an immediate threat to the health of the occupants.

13.1.5.5 Nonfriable materials containing asbestos may not require testing, special handling, or disposal procedures unless such materials are to be sawed, pulverized, or handled in such a manner that will cause dust and asbestos fibers to be released.

13.1.5.6 The samples shall be sent to a laboratory for testing to determine percent of asbestos, type of asbestos, and binding material, and the results documented with the Preliminary Design Analysis. Polarized light microscopy (PLM) analysis will be specified for initial screening. Analysis of floor tile and other resinously bound materials by EPA Method 600/M4-82-020 Dec. 1982 may yield false negative results because of method limitations in separating closely bound fibers and in detecting fibers of small length and diameter. Therefore, a qualitative assessment of vinyl floor tile shall be done by the transmission electron microscopy (TEM) method. The quality analysis of vinyl tile by TEM shows that asbestos is either present in high portions or not present in detectable quantities. Floor tile qualitative TEM results shall be reported as "> 1 percent asbestos," "< 1 percent asbestos, trace," or "no asbestos detected." By specifying qualitative analysis only for floor tile considerable cost savings should be realized over the quantitative assessment usually done by the TEM method.

13.1.5.7 Laboratories analyzing bulk samples shall be participating in the Research Triangle Institute testing round robin (phone 919-541-6000 or 800-334-8571 EXT. 6741) and shall have participated in at least 50 percent of the rounds within the last year and scored 90 percent or better. Laboratories analyzing air samples shall be AIHA accredited and be proficient in the NIOSH PAT program.

13.1.5.8 The following is a list of possible laboratories capable of performing the sample analysis. This list is by no means all inclusive or an endorsement of any one of them. As of the latest writing of this manual, these laboratories meet the requirements listed above. The A-E shall confirm that the laboratory still meets the requirements before sending samples.

a. Applied Technical Services, Inc.
   1990 Delk Industrial Blvd.
   Marietta, Georgia 30067
   (404) 423-1400

b. James H. Carr and Associates, Inc.
   P.O. Box 90209
   Columbia, South Carolina 29202
   (803) 776-7789

c. Q.A.S., Inc.
   4701 Joseph Michael Court
   Raleigh, North Carolina 27606
   (919) 851-2891
   P.O.C. John Sheats

d. Georgia Tech Research Institute (GTRI)
   Georgia Institute of Technology
   Atlanta, Georgia 30332

(404) 894-3825

e. Research Triangle Institute
P.O. Box 12194
Research Triangle Park, North Carolina 27709
(919) 541-6000
(800) 334-8571 Ext. 6741

13.1.5.9 Survey Reports: The asbestos survey report shall contain single line floor plan sketches of the buildings and rooms, showing where samples were taken, indexed schedule of samples surveyed with the sample number and other pertinent notes, narrative on methodology of survey. The laboratory bulk sample report numbers will be correlated with the samples taken.

13.1.5.10 The presence (or absence) of other suspected hazardous materials shall be verified by similar applicable methods discussed above.

13.2 APPLICABLE PUBLICATIONS. The most current editions of the publications listed below constitute an addendum to this chapter wherever referenced or applicable.

Federal Standards No. 313A

NIOSH The National Institute for Occupational Safety and Health
Manual of Analytical Methods, Physical and Chemical Analysis
Method

OSHA The Occupational Safety and Health Administration
29 CFR 1910.1001
29 CFR 1926.58

EPA Environmental Protection Agency
40 CFR 61 Subpart A & M

Guide Specification CEGS-02080

EFARS 52.2/9009

Note: The above referenced agencies may be contacted at the following addresses:

a. The National Institute for Occupational Safety and Health
CDC-NIOSH
Building J, N.E., Room 3007
Atlanta, Georgia 30333

b. The Occupational Safety and Health Administration
200 Constitution Avenue
Washington, D.C. 20210

c. Environmental Protection Agency
401 M Street, S.W.
Washington, D.C. 20460

13.3 PRECONCEPT SUBMITTAL REQUIREMENTS. No requirements for this section.

13.4 CONCEPT/EARLY PRELIMINARY (35 PERCENT) DESIGN SUBMITTAL REQUIREMENTS. The Concept/Early Preliminary Design Submittal shall include the following:

a. Criteria listings - standards, manuals, etc.

b. Trip report, including a description of findings, sample locations, and test procedures.

c. Written notification of any highly friable, asbestos contaminated, occupied areas which pose an immediate threat to the health of the occupants.

d. Certification and/or experience of A-E or consultant performing asbestos sampling and asbestos/lead abatement design.

e. Name and certification of asbestos/lead testing laboratory

f. Narrative describing anticipated scope of work. (Document building relative to making assumptions, including original construction date).

13.5 SIXTY PERCENT (60 PERCENT) SUBMITTAL REQUIREMENTS. No requirements for this section.

13.6 PRELIMINARY (60 PERCENT) DESIGN SUBMITTAL REQUIREMENTS.

13.6.1 Preliminary Design Analysis.

13.6.1.1 The Preliminary Design Analysis shall include all items contained in the Concept/Early Preliminary Design submittal and any necessary changes as required.

13.6.1.2 The A-E shall furnish certified laboratory test results with the project Preliminary Design Analysis verifying the existence of asbestos by type, concentration level (in percent), location, condition, and binder type (including percent). The analysis of vinyl floor tile is an exception as noted earlier. Qualitative TEM analysis of sample test results shall be submitted reporting results as ">1 percent asbestos," "<1 percent asbestos, trace," or "no asbestos detected." Negative test reports are also required. The A-E shall furnish certified laboratory test reports with the project preliminary Design Analysis verifying the existence of lead, concentration of lead, location, and condition. Negative test results are also required.

13.6.2 Preliminary Drawings.

13.6.2.1 Drawing(s) shall be submitted at Preliminary for all projects or portions thereof which contain asbestos (or other HM).

13.6.2.2 The A-E shall provide demolition or renovation drawing(s) which show(s) any asbestos abatement work.

13.6.2.3 Each drawing shall indicate the location of all HM's and type of the asbestos with enough detail so that quantities can be estimated.

13.6.2.4 The drawings shall include a schedule of occupancy phasing, (if applicable).

13.6.2.5 In crawl spaces, where the dirt floor has been contaminated with asbestos, the A-E shall indicate the area of dirt to be removed to a minimum of 25 mm (1 inch) depth or greater as deemed necessary, and whether the material is friable or nonfriable.

13.6.2.6 Asbestos abatement drawings will be prepared for color reproduction or will otherwise clearly delineate the asbestos work (only).

13.6.2.7 Plate numbers will carry an "R-" prefix for asbestos abatement. Work related to other HM's may be located on "R" plates or elsewhere as is feasible.

13.6.2.8 If part of a larger set of drawings, then all asbestos drawings shall be grouped together immediately following the site development drawings. Sheet and ring numbers shall follow sequentially with the other drawings in the set.

13.7 FINAL (100 PERCENT) DESIGN SUBMITTAL REQUIREMENTS.

13.7.1 Final Design Analysis. The Final Design Analysis shall be a refinement of the Concept/Early Preliminary Submittal and the Preliminary Design Analyses. If the Preliminary stage is not required, the Final Design Analysis shall include all items required in paragraphs 13.4 and 13.6.1.

13.7.2 Final Drawings.

13.7.2.1 Final plans will be the refinement and completion of preliminary drawings. All comments from this office relating to concept and preliminary design shall be incorporated in the final drawings.

13.7.2.2 Where crowded conditions exist, sufficient sections and elevations will be shown to indicate clearly the exact location of the asbestos in relation to other items.

13.7.2.3 The number of floor plans, elevations, and details will be sufficient to enable the Contractor to perform a detailed estimate.

13.7.3 Final Specifications.

13.7.3.1 CEGS 02080 ASBESTOS ABATEMENT MATERIALS, will be used as a guide for demolition and renovation projects which require asbestos abatement by removal, encapsulation, or enclosure, and will require editing for the specific project. CEGS 02090 LEAD- BASED PAINT (LBP) ABATEMENT AND DISPOSAL will be used where applicable.

13.7.3.2 A copy of the "Asbestos Survey Report" shall be included as an appendix to the Asbestos specification. A copy of the survey report for other HM's shall be included in the documents where applicable.

13.7.3.3 The A-E shall include both marked up draft and final typed specifications in the Final Design submittal package.

13.8 CORRECTED FINAL DESIGN SUBMITTAL REQUIREMENTS.

13.8.1 Notice. Corrected Final submittals are not considered a normal design level and are required only when Final submittals must be revised or corrected due to error or omission.

13.8.2 Compliance. The comments generated during the Final Design review shall be incorporated in the Corrected Final submittal.

13.9 ESTIMATE. In preparing the Project Estimate, the costs of the asbestos abatement will be identified as a separate item for the quantity of asbestos involved. Provide a detailed breakdown or backup data in the estimate for cost of the Industrial Hygienists on job, permit filing costs, air and final cleanup sampling and laboratory analysis costs, labor cost for abatement work for each of the major types of materials involved, transportation costs, and disposal costs. The costs relative to handling other HM's shall be estimated in similar manner as described for asbestos.

13.10 FEE PROPOSAL. The A-E's fee proposal shall identify the material sampling and laboratory test analysis as a separate item.

CHAPTER A-14

SUSTAINABLE DESIGN
INDEX

14.1 GENERAL
14.1.1 Scope
14.1.2 Objective

14.2 APPLICABLE PUBLICATIONS

14.3 PRECONCEPT SUBMITTAL REQUIREMENTS
14.3.1 Submittal
14.3.2 Sustainable Design Features

14.4 CODE 3 DESIGN REQUIREMENTS
14.4.1 SPIRIT/LEED Summary Table
14.4.2 Sustainable Design Narrative

14.5 CONCEPT/EARLY PRELIMINARY (35 PERCENT) DESIGN SUBMITTAL REQUIREMENTS
14.5.1 SPIRIT/LEED Summary Table
14.5.2 Sustainable Design Narrative
14.5.3 Supporting Documentation

14.6 PRELIMINARY (60 PERCENT) SUBMITTAL REQUIREMENTS
14.6.1 Review Comments
14.6.2 SPIRIT/LEED Summary Table
14.6.3 Sustainable Design Narrative
14.6.4 Supporting Documentation

14.7 FINAL (100 PERCENT) DESIGN SUBMITTAL REQUIREMENTS
14.7.1 Review Comments
14.7.2 SPIRIT/LEED Summary Table
14.7.3 Sustainable Design Narrative
14.7.4 Supporting Documentation

14.8 CORRECTED FINAL DESIGN SUBMITTAL REQUIREMENTS
14.8.1 Corrected Final Submittal
14.8.2 Review Comments
14.8.3 Verify Consistency

14.9 REQUIREMENTS FOR PREPARATION OF DESIGN/BUILD RFP SOLICITATION PACKAGES
14.9.1 Draft RFP
14.9.1.1 SPIRIT/LEED Summary Table
14.9.2 Final RFP

14.10 TECHNICAL REQUIREMENTS
14.10.1 Energy Economic Studies

14.11 OTHER RESOURCES

CHAPTER A-14

SUSTAINABLE DESIGN

14.1 **GENERAL**.

14.1.1 Scope. This chapter states criteria, requirements and guidance for sustainable design. Specific submittal requirements in this chapter supplement the requirements of Volume 1. SPiRiT or LEED scoring is our internal measure of success for sustainable designs.

14.1.2 Objective. The objective of the Corps of Engineers (COE) is to incorporate sustainable design into all projects to the maximum extent feasible in coordination with functional, operational, cost and other project requirements. Follow ETL 1110-3-491 "Sustainable Design in Military Facilities" for design guidance for sustainable design.

14.1.2.1 Army Projects. SPIRIT, Appendix C to ETL 1110-3-491, is the Army's rating tool for measuring achievement in sustainable design. Unless indicated otherwise, all Army projects shall strive to achieve SPIRIT "Bronze" level as a minimum.

14.1.2.2 Air Force Projects. LEED, by US Green Building Council (www.usgbc.org) is the Air Force's rating tool for sustainable design. Air Force projects shall strive to achieve LEED ratings as indicated in predesign conference. LEED certification with USGBC is required only when indicated in predesign conference. Air Force sustainable development policy letter signed by ILE 19 Dec 01 (Copy available on SAS_STD CD Disk2 or at https://wwwmil.acc.af.mil/) is in effect and applies to all MILCON (including non-privatized housing); consider for P-341 & privatized housing. The goal is to select 20% of FY04 projects as LEED pilot projects. Increasing a percentage of projects qualifying for LEED certification in subsequent years. 100% by FY09. For LEED certification 26 points (version 2.0) are required, but actual LEED certification is not required unless directed by ACC.

14.2 **APPLICABLE PUBLICATIONS**. The following publications form a part of this Manual to the extent indicated by the references thereto.

ETL 1110-3-491 Engineer Technical Letter, Sustainable Design in Military Facilities, 01 May 2001

TI 802-01 Technical Instructions for Code 3 Design with Parametric Estimate, 15 May 1998

TI 800-03 Technical Instructions – Technical Requirements for Design-Build, 1 July 1998

14.3 **PRECONCEPT SUBMITTAL REQUIREMENTS**.

14.3.1 Submittal. Certain projects may be of such magnitude or significance that in order to select the best possible design the COE may require a study to be made prior to concept submittal. Where a preconcept submittal is specifically called for, the design team shall submit three separate schemes of the project (Scheme A, Scheme B, Scheme C) consisting of a site plan, floor plan and major elevations for each scheme.

14.3.2 Sustainable Design Features. Each scheme shall include a SPiRiT or LEED summary table identifying the SPiRiT/LEED points earned and those points which have good potential to be developed by the scheme. The summary table shall be formatted and have a numbering system that matches SPiRiT or LEED as applicable. See the table at exhibit A-14-1.

14.4 **CODE 3 DESIGN REQUIREMENTS**.

14.4.1 SPiRiT/LEED Summary Table. Submit a summary table using a format similar to exhibit A-14-1 reflecting points already earned as reflected by the submittal and the points that will be earned in further design development and are reflected in the cost estimate.

14.4.2 Sustainable Design Narrative. For each point indicated on the Summary Table provide a brief description of the feature(s) that constitute how the point is or will be earned. Briefly describe maintenance requirements associated with that feature as applicable. For features that were considered but not incorporated briefly describe the feature and the reason(s) for not pursuing them.

14.5 **CONCEPT/EARLY PRELIMINARY (35 PERCENT) DESIGN SUBMITTAL REQUIREMENTS**.

14.5.1 SPiRiT/LEED Summary Table. Submit a summary table using a format similar to exhibit A-14-1 reflecting points already earned as reflected by the submittal and the points that you plan to earn in further design development.

14.5.2 Sustainable Design Narrative. For each point indicated on the Summary Table provide a brief description of the feature(s) that constitute how the point is or will be earned. Briefly describe maintenance requirements associated with that feature as applicable. For features that were considered but not incorporated briefly describe the feature and the reason(s) for not pursuing them.

14.5.3 Supporting Documentation. For each point earned that requires production of a document, calculations to measure achievement of goals, or meetings: furnish the documents, calculations and minutes of meetings applicable to this level of design development.

14.6 **PRELIMINARY (60 PERCENT) SUBMITTAL REQUIREMENTS**.

14.6.1 Review Comments. Implement concept submittal review comments.

14.6.2 SPiRiT/LEED Summary Table. Submit updated summary table reflecting points already earned as reflected by the submittal and the points that you plan to earn in further design development.

14.6.3 Sustainable Design Narrative. Provide updated sustainable design narrative. Highlight any changes and describe the reason for the change. Provide references to the drawings and specifications for location of applicable features.

14.6.4 Supporting Documentation. For each point earned that requires production of a document, calculations to measure achievement of goals, or meetings: furnish the documents, calculations and minutes of meetings applicable to this level of design development.

14.7 **FINAL (100 PERCENT) DESIGN SUBMITTAL REQUIREMENTS**.

14.7.1 Review Comments. Implement Concept and Preliminary comments.

14.7.2 SPiRiT/LEED Summary Table. Provide updated summary table.

14.7.3 Sustainable Design Narrative. Provide updated sustainable design narrative. Highlight any changes and describe the reason for the change. Provide references to the drawings and specifications for location of applicable features. <u>All sustainable design points claimed must be addressed in the drawings and/or specifications.</u> If the project fails to meet it's sustainable design goals provide a detailed explanation of the reason(s) for the failure.

14.7.4 Supporting Documentation. For each point earned that requires production of a document, calculations to measure achievement of goals, or meetings: furnish the documents, calculations and minutes of meetings applicable to this level of design development. Include documents previously submitted so that this submittal contains all supporting documentation to support points earned to date.

14.8 **CORRECTED FINAL DESIGN SUBMITTAL REQUIREMENTS**.

14.8.1 Corrected Final Submittal. The corrected final submittal is not to be considered a normal design level and will be provided in those cases in which the review comments require revision due to A-E error or omission.

14.8.2 Review Comments. Implement final review submittal comments.

14.8.3 Verify consistency between plans, specifications and final SPIRIT/LEED score.

14.9 **REQUIREMENTS FOR PREPARATION OF DESIGN/BUILD RFP SOLICITATION PACKAGES**.

14.9.1 Draft RFP. Incorporate sustainable design goals and requirements into the draft RFP.

14.9.1.1 SPiRiT/LEED Summary Table. Include a Summary Table using the format of exhibit A-14-1 as an appendix to the design requirements (edit as needed for SPIRIT or LEED). Fill in Summary Table to reflect points earned by the project independent of design and points that will be mandatory RFP requirements.

14.9.2 Final RFP. Incorporate draft RFP review comments.

14.10 **TECHNICAL REQUIREMENTS**.

14.10.1 Energy Economic Studies. Economic studies to evaluate the use of energy-related sustainable design features (building orientation, amount and location of windows, etc.) will be in accordance with Chapter A-7 ENERGY ANALYSIS.

14.11 **OTHER RESOURCES.**

http://www.usgbc.org - **International Green Building Conference and Expo**

http://www.greenguide.com/- The Green Building Resource Guide Book and CD

http://www.greenspec.com/- The Environmental Building news product directory and guide specification

www.ebuild.com or http://www.buildinggreen.com/- Green Building Advisor and the E-Build Library CD

http://www.wbdg.org/- Whole Building Design Guide

CHAPTER A-14

SUSTAINABLE DESIGN
EXHIBITS

14-A-1 SPIRIT Summary Table

14-**B**-1 LEED Green Building Rating System Version 2 Summary Table

APPENDIX XX
SPIRIT SUMMARY TABLE

	SPiRiT Summary Table	Maximum points possible	Mandatory Points	Proposed/Earned Points	
PAR	**FEATURE**				**REMARKS**
NOTE: SEE SPIRIT TEXT FOR FULL DESCRIPTION OF REQUIREMENTS FOR EACH ITEM.					
COMPLIANCE IS REQUIRED IF "R" OR A NUMBER GREATER THAN ZERO APPEARS IN THE					
MANDATORY POINTS COLUMN					
1.R1	Sediment/Erosion Control Plan	R	R	R	Project requirement
1.C1	Avoid undesirable sites	1			
	Site adjacencies/compatibility	1			
1.C2	Increase density	1			
	Minimize new infrastructure	1			
1.C3	Brownfield	1			
1.C4	Proximity to transit system	1			
	Bike racks & showers	1			
	Proximity to alternative fuel station	1			
	Parking capacity, carpool parking	1			
1.C5	Limited site disturbance , restoration	1			
	Reduced footprint	1			
1.C6	Stormwater runoff rate	1			
	Stormwater treatment	1			
1.C7	Reduce site heat islands	1			
	Reduce roof heat islands	1			
1.C8	Reduce light pollution	1			
1.C9	optimize site features	1			
1.C10	Cluster facilities	1			
	Mitigate offsite impacts	1			
1.C11	Site Ecology	1			
2.C1	High efficiecy irrigation/recycle site water	1			
	no irrigation	1			
2.C2	Innovative wastewater technologies	1			
2.C3	20% Water use reduction	1			
	30% Water use reduction	1			
3.R1	Building commissioning	R	R	R	Project requirement
3.R2	Minimum energy performance	R	R	R	Project requirement
3.R3	CFC Reduction	R	R	R	Project requirement
3.C1	Optimize energy performance	20			
3.C2	5% Onsite renewable energy	1			
	10% onsite renewable energy	2			
	15% onsite renewable energy	3			
	20% onsite renewable energy	4			
3.C3	Additional commissioning	1			
3.C5	Measurement and verification	1			
3.C6	Green power	1			
3.C7	Distributed generation	1			
4.R1	Storage & collection of recyclables	R	R	R	Project requirement
4.C1	Building reuse	3			
4.C2	Reduce construction waste	1			
	Reduce construction waste addl	1			

APPENDIX XX
SPIRIT SUMMARY TABLE

4.C3	Salvage/reused materials	1			
	Salvage/reused materials addl	1			
4.C4	Materials recycled content	1			
	Addl materials recycled content	1			
4.C5	Regionally manufactured materials	1			
	Regionally extracted materials	1			
4.C6	Rapidly renewable materials	1			
4.C7	Certified wood	1			
5.R1	Minimum IAQ performance	R	R	R	Project requirement
5.R2	Environmental tobacco smoke	R	R	R	Project requirement
5.C1	IAQ monitoring	1			
5.C2	Increase ventilation effectiveness	1			
5.C3	SMACNA/absorptive mtls/filtration	1			
	Flushout/baseline IAQ test	1			
5.C4	Adhesive/sealant VOC	1			
	Green Seal paints & coatings	1			
	CRI Green Label carpet	1			
	No urea/formaldehyde resins	1			
5.C5	Indoor pollutant source control	1			
5.C6	Operable windows, perimeter light controls	1			
	Non-perimeter controls	1			
5.C7	ASHRAE thermal comfort stds	1			
	Temperature/humidity monitoring	1			
5.C8	75% daylighting	1			
	90% outdoor view	1			
5.C9	Noise control	1			
5.C10	IAQ management plan	1			
6.C1	Team leader experience	1			
	Train team	1			
	Identify project goals	1			
	Charettes	1			
	Resolve tradeoffs	2			
	Document results	1			
7.C1	Develop O&M plan	2			
	Durable materials	1			
7.C2	Quality indoor environment	1			
	Functional work environment	1			
	Healthy work environment	1			
8.C1	Determine functional life	1			
	Determine building life	1			
8.C2	Design for future uses	1			
	Minimize building size	1			
	TOTAL	100			

APPENDIX B
LEED SUMMARY TABLE

PAR	LEED Summary Table - Green Building Rating System Version 2.0 FEATURE	Maximum points possible	Mandatory Points	Proposed/Earned Points	REMARKS
1	**Sustainable Sites**				Project requirement
1.1	Credit 1: Site Selection	1			
1.2	Credit 2: Urban Redevelopment	1			
1.3	Credit 3: Brownfield Redevelopment	1			
1.4	Credit 4: Alternative Transportation	4			
1.5	Credit 5: Reduced Site Disturbance	2			
1.6	Credit 6: Stormwater Management	2			
1.7	Credit 7: Landscape and Exterior Design to reduce Heat Islands	2			
1.8	Credit 8: Light Pollution Reduction	1			
2	**Water Efficiency**				
2.1	Credit 1: Water Efficient Landscaping	2			
2.2	Credit 2: Innovative Wastewater Technologies	1			
2.3	Credit 3: Water Use Reduction	2			
3	**Energy and Atmosphere**				
	Prerequisite 1: Fundamental Building System Commissioning	R	R	R	Project requirement
	Prerequisite 2: Minimum Energy Performance	R	R	R	Project requirement
	Prerequisite 3: CFC Reduction in HVAC&R Equipment	R	R	R	Project requirement
3.1	Credit 1: Optimize Energy Performance	10			
3.2	Credit 2: Renewable Energy	3			
3.3	Credit 3: Additional Commissioning	1			
3.4	Credit 4: Elimination of HCFC's and Halons	1			
3.5	Credit 5: Measurement and Verification	1			
3.6	Credit 6: Green Power	1			
4	**Materials and Resources**				
	Prerequisite 1: Storage & Collection of Recyclables	R	R	R	Project requirement
4.1	Credit 1: Building Reuse	3			
4.2	Credit 2: Construction Waste Management	2			
4.3	Credit 3: Resource Reuse	2			
4.4	Credit 4: Recycled Content	2			
4.5	Credit 5: Local/Regional Materials	2			
4.6	Credit 6: Rapidly Renewable Materials	1			
4.7	Credit 7: Certified Wood	1			
5	**Indoor Environmental Quality**				
	Prerequisite 1: Minimum IAQ Performance	R	R	R	Project requirement
	Prerequisite 2: Environmental Tobacco Smoke (ETS) Control	R	R	R	Project requirement
5.1	Credit 1: Carbon Dioxide (CO2) Monitoring	1			
5.2	Credit 2: Increase Ventilation Effectiveness	1			
5.3	Credit 3: Construction IAQ Management Plan	2			
5.4	Credit 4: Low- Emitting Materials	4			
5.5	Credit 5: Indoor Chemical and Pollutant Source Control	1			
5.6	Credit 6: Controllability of Systems	2			
5.7	Credit 7: Thermal Comfort	2			
5.8	Credit 8: Daylight and Views	2			
	LEED Innovation Credits	4			
	LEED Accredited Professional	1			
	TOTAL	69			

CHAPTER A-15
INTERIOR DESIGN

INDEX

15.1 GENERAL
15.1.1 Scope
15.1.2 Quality
15.1.3 Sustainable Design
15.1.4 Multiple Buildings
15.1.5 Site Adapting
15.1.6 Renovations

15.2 APPLICABLE PUBLICATIONS

15.3 CODE 3 DESIGN SUBMITTAL REQUIREMENTS
15.3.1 Submittal

15.4 CONCEPT/EARLY PRELIMINARY (35 PERCENT) DESIGN SUBMITTAL REQUIREMENTS
15.4.1 Structural Interior Design
15.4.2 Comprehensive Interior Design

15.5 SIXTY PERCENT SUBMITTAL REQUIREMENTS
15.5.1 General

15.6 PRELIMINARY (60 PERCENT) SUBMITTAL REQUIREMENTS
15.6.1 Implement Concept Submittal Review Comments
15.6.2 Furnishings Plan
15.6.3 Signage
15.6.4 Structural Interior Design
15.6.5 Comprehensive Interior Design

15.7 FINAL (100 PERCENT) DESIGN SUBMITTAL REQUIREMENTS
15.7.1 Implement Concept and Preliminary Comments
15.7.2 Structural Interior Design
15.7.3 Comprehensive Interior Design

15.8 CORRECTED FINAL DESIGN SUBMITTAL REQUIREMENTS
15.8.1 Corrected Final Submittal
15.8.2 Implement Final Review Submittal Comments
15.8.3 Verify Consistency

15.9 REQUIREMENTS FOR PREPARATION OF DESIGN/BUILD RFP PACKAGES
15.9.1 General

15.10 TECHNICAL REQUIREMENTS
15.10.1 General
15.10.2 Finishes
15.10.3 Handicapped Accessibility
15.10.4 Structural Interior Design
15.10.5 Comprehensive Interior Design

CHAPTER A-15

INTERIOR DESIGN

15.1 **GENERAL**.

15.1.1 Scope. This chapter states criteria, requirements and guidance for interior design. Specific submittal requirements in this chapter supplement the requirements of Volume 1.

15.1.2 Quality. The objective of the COE is to obtain attractive facilities that are designed using sound technical knowledge and constructed using recognized, good industry practices, as well as being cost effective. The design and construction shall incorporate those characteristics which will provide facilities with present and continuing utility, durability and desirability, and which will be economical to maintain for the life of the structure. The design shall also be such as to provide a safe and healthy environment.

15.1.3 Sustainable Design. The COE has a policy to support the design, construction, operation and reuse/removal of the built environment (infrastructure and buildings) in an environmentally and energy efficient manner. Chapter 14, Sustainable Design, contains detailed requirements.

15.1.4 Multiple Buildings. Unless directed otherwise, when a project includes multiple buildings drawings shall be sequenced so that each building has a separate stand-alone set of drawings.

15.1.5 Site Adapting. When site adapting standard working drawings or using earlier designs at other locations, the design changes will generally be limited to exterior revisions to comply with the Installation Design Guide or other applicable local criteria, the selection of alternate interior materials when such changes are economically justified and to changes necessary for updating for conformance to current criteria.

15.1.6 Renovations. On renovation and modification projects provide separate plans showing demolition work required. Indicate items to be removed with dashed lines and hatched/poche'd areas to clearly show quantities and extent. Provide demolition notes to clarify scope of demolition work.

15.2 **APPLICABLE PUBLICATIONS**. The following publications form a part of this Manual to the extent indicated by the references thereto.

TI 800-01 Technical Instructions, Design Criteria, 20 Jul 1998

TI 802-01 Technical Instructions for Code 3 Design with Parametric Estimating, 15 May 1998

TI 800-03 Technical Requirements for Design-Build, 1 July 1998

UFAS Uniform Federal Accessibility Standards

ADAAG Americans with Disability Act Guidelines, Sep 1994

"Interior Design Presentation Format," Feb 1999, Savannah District COE

"Interior Design Presentation Format," Nov 1996, Air Force Center for Environmental Excellence

MIL-HDBK-1008c Military Handbook, “Fire Protection for Facilities Engineering, Design and Construction, 10 June 1997

NFPA 101 National Fire Protection Association, “Life Safety Code”, current edition

Department of Defense Antiterrorism Standards for Buildings, 25 January 2002 Draft

15.3 **CODE 3 DESIGN SUBMITTAL REQUIREMENTS**.

15.3.1 Submittal. Submittal content and format shall be as described in TI 802-01, “Technical Instructions for Code 3 Design with Parametric Estimating”.

15.4 **CONCEPT/EARLY PRELIMINARY (35 PERCENT) DESIGN SUBMITTAL REQUIREMENTS**.

15.4.1 Structural Interior Design. Provide 35 percent submittal for Structural Interior Design in accordance with "Interior Design Presentation Format", Air Force or Savannah District publication as applicable.

15.4.2 Comprehensive Interior Design. When required by contract, provide 35 percent submittal for Comprehensive Interior Design in accordance with "Interior Design Presentation Format," Air Force or Savannah District publication as applicable.

15.5 **SIXTY PERCENT SUBMITTAL REQUIREMENTS**.

15.5.1 General. This submittal consists of a limited number of drawings. It’s purpose is to check progress, functional layout and incorporation of concept review comments. Design does not stop at this submittal.

15.6 **PRELIMINARY (60 PERCENT) SUBMITTAL REQUIREMENTS**.

15.6.1 Implement concept submittal review comments.

15.6.2 Generic Furniture/Furnishings Plan. Submit generic furniture/furnishing plans for each floor showing the location and type of all furniture and furnishings as programmed by the project. When required by contract, indicate by schedule which items shall be furnished and/or installed by the Contractor and which shall be furnished and/or installed by the Government.

15.6.3 Signage. Provide interior signage plans and message schedule. Note, any special features such as changeable components. Note exterior signage locations and types on drawings. All exterior signage shall be in accordance with the "Installation Design Guide" for each respective Post or Base where applicable.

15.6.4 Structural Interior Design. Provide 65 percent submittal in accordance with applicable "Interior Design Presentation Format" publication.

15.6.5 Comprehensive Interior Design. When required by contract, provide 65 percent submittal in accordance with applicable "Interior Design Presentation Format" publication.

15.7 **FINAL (100 PERCENT) DESIGN SUBMITTAL REQUIREMENTS**.

15.7.1 Implement Concept and Preliminary review comments.

15.7.2 Structural Interior Design. Provide 100 percent submittal in accordance with applicable "Interior Design Presentation Format" publication.

15.7.3 Comprehensive Interior Design. When required by contract, provide 100 percent submittal in accordance with applicable "Interior Design Presentation Format" publication.

15.8 **CORRECTED FINAL DESIGN SUBMITTAL REQUIREMENTS**.

15.8.1 The corrected final submittal is not to be considered a normal design level and will be provided in those cases in which the review comments require revision to the final submittal documents.

15.8.2 Implement final review submittal comments.

15.8.3 Verify consistency between plans, specifications and final corrections.

15.9 **REQUIREMENTS FOR PREPARATION OF DESIGN/BUILD RFP PACKAGES**.

15.9.1 General. Unless indicated otherwise, RFP shall be based upon “partial” design development as defined by TI 800-03 “Technical Instructions for Design-Build”.

15.10 **TECHNICAL REQUIREMENTS**.

15.10.1 General.

15.10.1.1 In addition to the Criteria contained in the following paragraphs, interior design shall comply with technical instructions. Materials and construction methods shall comply with the instructional notes inserted in the applicable guide specifications.

15.10.1.2 Structural Interior Design. Structural Interior Design (SID) is required for all projects unless specifically deleted by contract. In general, the SID provides samples of all interior and exterior finishes and signage.

15.10.1.3 Comprehensive Interior Design. Comprehensive Interior Design (CID) is provided only when required by contract. In general, the CID is an expansion of the SID that also addresses furniture and accessories. Furniture and accessories are purchased separate from the construction contract. When CID is requested the AE provides both the SID and CID required items.

15.10.1.4 Format and Content. The format and content of SID and CID shall be in accordance with "Interior Design Presentation Format", dated November 1996, by Air Force Center for Environmental Excellence for all Air Force projects or in accordance with "Interior Design Presentation Format", dated Feb 1999, by U.S. Army Corps of Engineers, Savannah District, for all other projects except as modified in this chapter. When a CID is required, it will be formatted in a separate binder from the SID binder and shall include all the components as required under 3.10.3.1. All SID items will be in a separate binder volume from all other items in the CID.

15.10.1.5 Number of Copies. Six copies are required at each submittal unless indicated otherwise in the contract. Each copy is to have actual physical samples unless indicated otherwise in the contract.

15.10.2 Finishes.

15.10.2.1 Color Schedules. Color for color schedules (excluding prefinished items) for all Ft. Bragg, NC projects shall be selected from FED-STD 595b. For all other projects, the use of FED-STD 595b for color schedules (excluding prefinished items) is optional. FED-STD 595b Color Fan Deck, with color chips for desk use, and 75 x 175 mm (3-inch by 5-inch) color chips by sets, can be ordered from the following address. (Cost of $72.00)

Global Engineering Documents
15 Inverness Way East
Englewood, CO 80112-5704
1-800-854-7179

15.10.2.2 Finishes Disclaimer. Interior and exterior finishes may be specified by using manufacturer and product names. When this is done, a disclaimer must be placed on the drawings or in the specification where this is done that states the following:
“The manufacturer's names and their products referenced indicate the color, texture, and pattern required for the materials listed. The products furnished shall meet the color, texture, and pattern indicated as well as the material quality and performance specified in the applicable technical section. The use of manufacturer's names and products do not preclude the use of other manufacturer's products of approved equal color, texture, and pattern as long as all requirements in the technical sections are met”.

15.10.3 Handicapped Accessibility. Where facilities for the handicapped are to be included in whole or in part, the design shall be in accordance with the American With Disabilities Act Accessibility Guidelines (ADAAG), and Uniform Federal Accessibility Standards (UFAS). In case of conflict, the more stringent requirement shall be followed.

15.10.4 Structural Interior Design (SID)

15.10.4.1 Use of SID. The SID is used during design to review color and finish selections, prewired workstations, and signage design. It is used by Government personnel during construction in review of contractor submittals. The construction contractor does not receive the SID; it is an internal document only and not part of the construction contract documents. All information relating to building finishes, prewired workstations and signage must be in the contract documents. DO NOT REFERENCE THE SID IN THE CONTRACT DOCUMENTS.

15.10.4.2 Prewired Workstations. Prewired workstations (systems furniture) are included in the CID portion for certain projects. When this is the case, the construction contract documents will include prewired workstation design on I-Plates showing the location of the panels, worksurfaces, storage components, and other elements of the typical workstations. All coordination with electrical/telephone/computer outlets will be indicated. The workstation layouts are provided for review by the Government to verify coordination of all disciplines, and the purchase of the furniture is not part of the construction contract. A disclaimer will be indicated on the I-Plate. All finishes and purcurement information shall be included in the CID submittal.

15.10.4.3 Special Requirements. The interior designer shall identify items in the SID or CID that require attachment to the building either by cutting or fitting. The designer must prepare specifications and drawings for this service to be performed.

15.10.5 Comprehensive Interior Design.

15.10.5.1 Use of CID: The CID is used during design to review proposed finishes and furniture layouts coded to the furniture illustrations, furniture items, fabrics, colors, and furniture costs. It is used by the Government purchaser to procure the furniture. It is used by the User to direct installation to verify that furniture items received match what was ordered. It is used by Government personnel who administer the construction contract.

15.10.5.2 Scope. The CID is to include accessories such as lamps, clocks, framed artwork, artificial plants, trash receptacles, draperies, bedspreads in addition to furniture, finishes and signage.

15.10.5.3 Sources of Furniture. The Government is required to purchase furnishings from mandatory sources. This includes GSA Federal Supply Service and UNICOR, see 5-5.10.3.5. If the products offered by these sources do not meet the project requirements, then furnishings can be purchased from commercial vendors that have GSA contracts under GSA's Multiple Award Schedules. Many commercial furniture companies have GSA contracts with pre-negotiated prices. Only when none of these sources can meet the

project requirements can open market items be purchased. When selecting furnishings, always review mandatory sources first, then GSA contract sources, then open market sources. When the interior designer determines CID items available on contract do not meet the functional requirements, or there is no current GSA resource, a waiver to use open market sources is required. The designer shall write a waiver/justification letter with salient features of that item. The letter shall be addressed to:

Director of Furniture Commodity Center
GSA/FSS/FCNE
Crystal Mall Building #4, Room 1010
Washington, DC 20406

This letter shall be included on the CID binder attached to the applicable order form.

15.10.5.4 Quality of Products. The designer is to determine the project requirements and then select furnishings that meet these requirements. The products offered through mandatory government sources and GSA contracts represent a very wide range of quality and features. Being included in a GSA contract does not mean that a product meets any minimum quality standard. It is the responsibility of the designer to research products and determine their acceptability.

15.10.5.5 UNICOR Waiver. All furniture/furnishings shall be selected under the guidance of the National Defense Authorization Act – FY 2002, S1438, Title VIII, Subtitle B, Sec 811, Para 2410 which states UNICOR is no longer a mandatory source for furniture and a waiver is **not required from UNICOR** on items before selecting from the GSA Schedules. However, UNICOR shall be considered as a vendor to determine if UNICOR offers the "best value" product in terms of quality, price, and timeliness. If an UNICOR product is not e "best value", then GSA Schedules shall be used for selection of furniture/furnishings. Three GSA vendors shall be considered but only one selected for the prepared Order Form. A Best Value Determination Guideline Sheet shall be filled out for each vendor whose furniture has been specified and the sheet provided in the CID binder. (This is in addition to the requirement under 15.10.1.4 Format and Content) All furniture/furnishings shall be selected from GSA Schedules. The GSA web site is: www.gsa.gov. The UNICOR web site is: www.unicor.gov. The UNICOR regional sales representative for the Savannah District is: Joe McCormick @ 803-802-0189.

15.10.5.6 Furniture Information Sources. The UNICOR catalog can be obtained by calling UNICOR regional representative for the Savannah District at 803-082-0189, Joe McCormick. A listing of vendors with GSA contracts can be found on the GSA web site at: www.gsa.gov.

15.10.5.7 Customer's Own Material (COM). COM's are not permitted, except when selecting fabrics for Army barracks projects designed under the Interior Design Manual for Single Soldier Housing and submitted to the COE Huntsville District for procurement. A copy of the manual maybe ordered by contacting: www.hnd.usace.army.mil.

15.10.5.8 Personal Computers. Design of all workstations and office furniture, including executive offices, should assume the use of a personal computer and accommodate it with an articulating keyboard tray and corner work surface where feasible.

15.10.5.9 Medical Projects. For medical projects where furniture items are included on the equipment list provided by the Government, the CID location codes will be the JSN numbers from the equipment list.

End of Section

VOLUME II
PART B
GEOTECHNICAL

CHAPTER B-1

GEOTECHNICAL

INDEX

Para No.	Title	Page No.
1.1	GENERAL	B-1-1
1.2	FOUNDATION REPORT	B-1-1
1.3	RESPONSIBILITY OF SECTIONS	B-1-1
1.4	SUBSURFACE INVESTIGATIONS	B-1-1
1.5	COORDINATION	B-1-1

CHAPTER B-1

GEOTECHNICAL

1.1 **GENERAL**. The Geotechnical and Materials Branch is responsible for the performance of all design and design related activities in the areas of site design, soils and foundation design, and geologic design including field subsurface investigations. The Branch consists of three Sections, each responsible for one of the areas mentioned above. The Sections within the Branch are; Site Development Section (CESAS-EN-GD), Soils Section (CESAS-EN-GS), and Geology Section (CESAS-EN-GG). The Geology Section contains a field investigation unit, Explorations Unit, which is responsible for the performance of all field and subsurface investigations and sampling. Most of the interface between the Architect-Engineer (A-E) firms with whom the Savannah District contracts will be with the Site Development Section and the Soils Section. The mission of these organizations is described in CHAPTERS B-2 and B-3.

1.2 **FOUNDATION REPORT**. The Savannah District will generally provide to the A-E all foundation investigations and subsurface data required for the design of the project. This data will be contained in a Foundation Report which will set forth site-specific geotechnical technical requirements and requirements for the project. It will be the responsibility of the A-E to incorporate these features and to use the furnished parameters and guidance in his design of the structure foundations and site work. Appendix A of the contract will inform the A-E whether or not the Government will furnish the foundation data.

1.3 **RESPONSIBILITY OF SECTIONS**. The Site Development and Soils Sections will generally be involved on all A-E jobs involving any site and/or soils work. These organizations will interface with the A-E's by preparation of scopes of work for their respective disciplines, preparation and furnishing of foundation reports, and the review of various design submittals. Generally, the A-E firms will not have any direct contact with the Geology Section; however, in the case of specialized jobs such as those that may involve installation of wells, rock excavation, groundwater monitoring, or quarry sources, some interface should be expected. This contact will be handled in the same manner as any other discipline.

1.4 **SUBSURFACE INVESTIGATIONS**. The Geotechnical and Materials Branch, Geology Section, maintains its own in-house subsurface capability. It is Branch policy to conduct field investigations with Corps of Engineers' forces and provide the data to the A-E for their use. This process is discussed further in CHAPTER B-3.

1.5 **COORDINATION**. While some direct contact between the A-E and one of the Branch Sections is necessary from time to time, all communications should flow through the Military Branch Project Manager. In cases where direct contact is needed, approval of such contact should be secured from the Project Manager.

CHAPTER B-2

SOILS

INDEX

Para. No.	Title	Page No.
3.1	GENERAL	B-2-1
3.1.1	Soils Section	B-2-1
3.1.2	Chapter Description	B-2-1
3.1.3	Foundation Report	B-2-1
3.1.4	Field Tests	B-2-1
3.1.5	Preliminary Foundation Report	B-2-1
3.1.6	Determination of Foundation Investigations	B-2-1
3.2	APPLICABLE PUBLICATIONS	B-2-2
3.3	PRECONCEPT SUBMITTAL REQUIREMENTS	B-2-2
3.4	CONCEPT/EARLY PRELIMINARY (35%) DESIGN SUBMITTAL REQUIREMENTS	B-2-2
3.4.1	Design Analysis	B-2-2
3.4.2	Design Drawings	B-2-2
3.5	SIXTY PERCENT (60%) SUBMITTAL REQUIREMENTS	B-2-3
3.6	PRELIMINARY (60%) DESIGN SUBMITTAL REQUIREMENTS	B-2-3
3.7	FINAL (100%) DESIGN SUBMITTAL REQUIREMENTS	B-2-3
3.8	CORRECTED FINAL SUBMITTAL REQUIREMENTS	B-2-3
3.9	TECHNICAL REQUIREMENTS	B-2-3
3.9.1	Deep Foundations	B-2-3
3.9.2	Earth Liners	B-2-3
3.9.3	Cathodic Protection and Grounding Systems	B-2-3
3.9.4	Permanent Water Well Design and Construction	B-2-4
3.9.5	Structures	B-2-4
3.9.6	Pavements	B-2-4
3.9.7	General Earthwork and Special Features	B-2-4

CHAPTER B-2

SOILS

3.1 **GENERAL**.

3.1.1 *Soils Section.* The Soils Section is responsible for the foundation design of all structures within the Savannah District military boundary. This section provides the Architect-Engineer (A-E) all foundation reports associated with military design and construction.

3.1.2 *Chapter Description.* This chapter describes requirements pertaining to foundation design and presents data that can be expected in the Foundation Design Analysis Report. This chapter also lists the specific requirements of submittal stages for geotechnical design features. The Savannah District Corps of Engineers will inform the A-E in the Specific Instructions portion of the contract whether subsurface investigation testing and a foundation design analysis report are required. When required, the Savannah District's Geotechnical and Materials Branch will accomplish subsurface investigations, materials testing, and a Foundation Report.

3.1.3 *Foundation Report.* The foundation report will be furnished the A-E when drilling and testing is completed. The foundation report will be based on a final site plan and data furnished by the A-E on SAS Form Letter 363. Any change in siting or changes to the basic information furnished in the SAS FL 363 shall be reported immediately as these changes will likely affect the Foundation Report. The Foundation Report will include the allowable soil bearing value, minimum depth to the base of footing, depth of the groundwater table, special foundation requirements, waterproofing measures, and marked-up specifications. The foundation report is not limited to the above information and may direct types of foundation to be used at the site, various soil parameters for retaining wall design, critical soil parameters, instrumentation requirements, special construction procedures, required compaction efforts, excavation and drainage requirements, dewatering specifications, borrow area usage, CBR and modules of subgrade values, and any other pertinent foundation information. The analysis may include several alternatives for the solution to a given problem. If this is the case, the A-E then has the latitude of using the solution most compatible with his design. The Foundation Report will be furnished the A-E at the time to proceed with final design or as soon thereafter as practicable.

3.1.4 *Field Tests.* Specialty field tests, such as pH measurements, resistivity testing, in-place bearing tests and percolation tests will be included with the Foundation Report as applicable for use in design by the A-E. Request for soil percolation tests should be made by the A-E through the Savannah District Project Manager.

3.l.5 *Preliminary Foundation Report.* A preliminary foundation report based on available data in the area can be furnished the A-E if requested, but is subject to change pending results of the subsurface investigation, soils testing, and the final Foundation Report.

3.1.6. *Determination of Foundation Investigations.* The Savannah District Geotechnical and Materials Branch, Soils Section, will determine:

3.1.6.1 The location of borings (including depth of holes) based on the adequacy of the detailed site plan.

3.1.6.2 The location of any required field tests. It should be emphasized that soil borings and testing of soil samples are usually conducted during the concept (early preliminary) or preliminary stages and are based on a firm siting of the proposed structures. After completion of the soil borings, the Savannah District will furnish the location of the soil borings which the A-E will locate on the Grading Plan (C-plate(s)). The soil boring sheets will be placed on full size drawing sheets and scanned to electronic format and added to the drawing set. The AE should save space on the index and drawing numbering for these at the end of the C-plates.

3.2 **APPLICABLE PUBLICATIONS**.

AFM 88-3 (CHAPTER 7)	Procedures for Foundation Design of Buildings and Other Structures
TM 5-822-5	Flexible Pavement for Roads, Streets, Walks, and Open Storage Areas
TM 5-822-6	Rigid Pavement for Roads, Streets, Walks and Open Storage Areas
TM 5-822-7	Standard Practice for Concrete Pavements
TM 5-822-8	Bituminous Pavements - Standard Practice

3.3 **PRECONCEPT SUBMITTAL REQUIREMENTS.**

No requirements for 10% design.

3.4 **CONCEPT/EARLY PRELIMINARY (35%) DESIGN SUBMITTAL REQUIREMENTS.**

3.4.1 *Design Analysis.*

a. Provide a completed SAS Form Letter 363 (Exhibit B-2-1) for each structure involved in the contract. (The foundation analysis report will be based on information presented in this form along with other data requested on the form.) Provide column and wall loads for the existing building when there is a planned building addition.

b. Incorporate recommendations presented in the Preliminary Foundation Report or Final Foundation Report if it has been provided at this design stage.

3.4.2 *Design Drawings.*

a. Provide one copy of the site plan in Microstation PC Format to the Savannah District's Geotechnical and Materials Branch, Attention: Chief, Soils Section, for the purpose of locating borings. This site plan shall be of sufficient detail to include locations of all proposed structures, roads, parking areas and contours, as well as any existing features such as buildings, fences, roads, parking areas and existing contours. The site plan shall also include the state plane coordinate system for the particular state in which the project is located. Finished floor elevations, of all structures and finished grade elevations shall be indicated. When there is a building addition, the A-E shall provide a plan, which will locate the existing footings and columns. This plan shall also include the depths of existing footings.

b. Locate borings and field test symbols on an applicable grading plan (C- plate(s)) if locations have been provided by the Savannah District Office during concept design. A note "See complete logs of borings on the plates at the end of Civil section of drawings" will be placed on the boring location plan. Add the appropriate symbol to legend. The symbols shown on Exhibit B-2-2 will be used to identify borings on military projects in lieu of symbols shown in the Savannah District Drafting Standard. The soil boring sheets will be placed on full size drawing sheets and scanned to electronic format and added to the drawing set. The AE should save space on the index and drawing numbering for these at the end of the C-plates.

3.5 **SIXTY PERCENT (60%) SUBMITTAL REQUIREMENTS.**

See Volume 1 for submittal requirements.

3.6 **PRELIMINARY (60%) DESIGN SUBMITTAL REQUIREMENTS.** Comply with comments on the Concept/Early Preliminary (35%) review.

3.7 **FINAL (100%) DESIGN SUBMITTAL REQUIREMENTS.**

a. Comply with comments on the Preliminary (60%) design review.

b. Return the marked-up specifications provided by the Savannah District Office along with A-E prepared specifications for final review.

c. Include drawings and specifications prepared by the Savannah District Office in the Index for drawings and Table of Contents for specifications.

3.8 **CORRECTED FINAL SUBMITTAL REQUIREMENTS.**

Comply with comments on Final (100%) Design Review.

3.9 **TECHNICAL REQUIREMENTS.**

3.9.1 *Deep Foundations.* The Foundation report will provide recommendations for the type of deep foundation system to be used (piling, caissons, etc.), the size and length of the piling, and the allowable bearing capacity of each pile. The A-E shall determine the number of piles, actual spacing, and the pile cap design.

3.9.2 *Earth Liners.* Savannah District Office will provide the A-E with the overall geologic conditions, the insitu and constructed permeabilities that can be obtained using native materials and stabilizing agents, liner thicknesses, and slope stabilization requirements. The A-E will be required to apply for all necessary permits. As part of the permitting process he will be required to determine the classification of the material to be contained, the permeability necessary to contain the material, and the size and functional configuration of the containment area.

3.9.3 *Cathodic Protection and Grounding Systems.* Savannah District Office will perform all pH tests, salinity tests, resistivity measurements, etc., required to design corrosion control and grounding systems. The raw field data will be provided in the Foundation Report without interpretation or recommendations. The A-E shall design all corrosion control and grounding

systems required for the project and shall advise the appropriate Savannah District Project Manager immediately if additional field data is required.

3.9.4 *Permanent Water Well Design and Construction.* The A-E will be required to determine the functional location of the well, to verify the liter per minute (or gpm) requirements of the facility, to verify future demands planned for the well, and to determine the pump size, type and setting after receipt of aquifer test data. Savannah District Office will prepare all drawings and specifications (Section 02671 WATER WELL or 02672 WATER WELLS as appropriate) required to construct the well based upon information supplied by the A-E. In some cases, Savannah District Office will construct the actual well during the design stage of the project.

3.9.5 *Structures.* The Foundation Report will recommend the type of foundation system to be used, the allowable bearing capacity, the depth of placement for the footings, and the floor slab preparation. The A-E shall size all footings, grade beams, slabs, etc., utilizing the recommendations and restrictions presented in the Foundation Report. Earthwork specification for the structures will be prepared by Savannah District Office. (See Chapter A-2, STRUCTURAL, for further design requirements).

3.9.6 *Pavements.* The Foundation Report will recommend for pavement subgrades the allowable design CBR and modulus of subgrade reaction parameters along with the required compaction effort. Guidance will be offered on the types of base course materials available in the area and design strengths. The A-E shall design all pavement types, thicknesses, geometry and locations, and prepare all pavement material specifications. (See Chapter B-2, SITE DEVELOPMENT, for deviations or exceptions.)

3.9.7 *General Earthwork and Special Features.* The Foundation Report will recommend undercutting requirements, fill and backfill placement procedures, types of equipment to use, and outline earthwork procedures for special features such as retaining walls, embankment construction, earth covering of structures, basements, buried and mounded tanks, utilities, etc. Savannah District Office will prepare all appropriate earthwork specifications:

02221/S EXCAVATION, FILLING AND BACKFILLING FOR BUILDINGS;
02225/S EARTHWORK FOR ROADWAYS, RAILROADS, AIRFIELDS, AND SITE GRADING FOR BUILDINGS;
02210/S GRADING; and
02222/S EXCAVATION, TRENCHING, AND BACKFILLING FOR UTILITIES SYSTEMS)

Savannah District Office Specifications for the general conditions and assist the A-E in the preparation of specifications for any special features.

Note that these are Savannah District Guide Specifications rather than CEGS guide specifications.

CHAPTER B-2

SOILS

EXHIBITS

B-2-1	SAS FL 363 Foundation Data
B-2-2	Subsurface Exploration Symbols

FOUNDATION DATA

Project
Title:_____

FY-_____ , L.I._____ ,
Location:_____

A-E
Firm:_____A
-E Phone No._____

1. The following information is furnished relative to the foundation analysis for the subject project. (A separate CESAS FL 363 should be completed for each structure involved in the project.)

a. Type of structural system: (Brief Statement)

b. General Scope: _____ ft. x _____ ft _____ no stories_____.
(Check applicable blocks below)

☐ Slab-on Grade ☐ Basement Walls

☐ Crawl Space ☐ (1) Fixed at 1st Floor

☐ Retaining Walls ☐ (2) Fixed at Footings

☐ Areas Recessed below F.F. (Provide with info for Item 2. below)

c. Type of Foundation: (Check applicable blocks and fill in loads)

☐ Mat. Foundation ☐ Approx. Max. Load on Mat. Foundation _____ K/SF

☐ Spread Footings ☐ Approx. Max. Col. Load _____ Kips

☐ Wall Footings ☐ Approx. Max. Wall Load _____ K/ft.

☐ Foundation Walls ☐ Grade Beams

☐ Rolled Edge Slab ☐ Combined Footings (See Item 2. below)

☐ Piles ☐ Underpinning (See Item 2. below)

d. Other:

☐ Pre-Engineered Building Yes _____ No _____

☐ Basement and/or Crawl Space Elevation _____MSL

☐ Finished Floor Elevation _____MSL

2. Specific information and/or details pertinent to the foundation analysis are provided attached to this form.

3. Attached is one reproducible copy (Sepia or Cronaflex) of the detail site plan and a plan showing the location of columns and walls. (If the maximum column load exceeds 100 Kips or the maximum wall load exceeds 3 K/ft., the individual load, dead and live, for each footing shall be provided on the location plan of columns and walls.)

4. Boring locations will be determined by Savannah District personnel.

_____
A-E Representative

_____
Date

SUBSURFACE EXPLORATION SYMBOLS

CONTINOUS SPLITSPOON BORING	**CS**
AUGER BORING	**A**
TEST PIT	**TP**

VOLUME II
PART C
VALUE ENGINEERING

VOLUME II

TECHNICAL, COST ESTIMATING AND VALUE ENGINEERING REQUIREMENTS

PART C - VALUE ENGINEERING

INDEX

Para. No.	Title	Page No.
1.1	GENERAL	C-1
1.2	APPLICABLE PUBLICATIONS	C-1
1.3	PRECONCEPT SUBMITTAL REQUIREMENTS	C-1
1.4	CONCEPT/EARLY PRELIMINARY (35%) DESIGN SUBMITTAL REQUIREMENTS	C-1
1.5	SIXTY PERCENT (60%) SUBMITTAL REQUIREMENTS	C-1
1.6	PRELIMINARY (60%) DESIGN SUBMITTAL REQUIREMENTS	C-2
1.7	FINAL (100%) DESIGN SUBMITTAL REQUIREMENTS	C-2
1.8	CORRECTED FINAL DESIGN SUBMITTAL REQUIREMENTS	C-2
1.9	VE VERSUS DESIGN	C-2
1.10	BEFORE THE VE METHODOLOGY CAN BE APPLIED	C-2
1.11	SCOPE OF WORK	C-2
1.12	VALUE ENGINEERING STUDY SERVICES	C-3
1.13	ESTABLISHMENT AND APPROVAL OF THE VE TEAM	C-3
1.13.1	Members	C-3
1.13.2	VE Experience	C-3
1.14	METHODS OF PROCUREMENT	C-3

INDEX (Cont.)

Para. No.	Title	Page No.
1.15	VE AND A-E FIRM REQUIREMENTS	C-4
1.15.1	Typical VES Team Requirements (Subcontracted VES)	C-4
1.15.2	Typical Design A-E Effort for VE Briefing and Review Response of the VE Study	C-5
1.16	STUDY GROUP REQUIREMENTS AND ENVIRONMENT	C-5
1.16.1	Information Required	C-5
1.16.2	Environment	C-6
1.17	BASIC REQUIREMENTS FOR VE	C-6
1.18	REPORTS AND MINIMUM DOCUMENTATION REQUIREMENTS FOR VE	C-7
1.19	VE REPORT FORMAT	C-8
1.19.1	Numbering System	C-8
1.19.2	Alternatives	C-8
1.20	VE REPORT SUBMISSION SCHEDULES FOR ORAL PRESENTATION	C-9
1.20.1	Working Relationships	C-9
1.20.2	Presentation and Report	C-9
1.21	APPROVAL AND IMPLEMENTATION OF PROPOSED VE CHANGES	C-9
1.22	GUIDANCE AND CONSULTATION	C-9
1.23	SPECIFIC INSTRUCTIONS	C-9

VOLUME II

TECHNICAL, COST ESTIMATING, AND VALUE ENGINEERING REQUIREMENTS

PART C - VALUE ENGINEERING

1.1 **GENERAL**. Each year, a considerable amount of this nation's available resources are allocated to construction. The costs of construction have risen sharply in the past decade, and the rise in costs exceeds that of the preceding year. Every means, therefore, must be utilized to obtain our required construction within funds allocated, to efficiently and effectively utilize the taxpayers' money placed in our trust for military readiness. Value Engineering (VE) is a tool to help management gain the desired results within the constraints of time and cost. To capture this potential, VE must be clearly understood and correctly applied and must have the involvement and cooperation of management and every decision-maker in the design and construction process.

1.2 **APPLICABLE PUBLICATIONS**.

AR 5-4 and OCE Supplement I	Department of the Army Productivity Improvement Program (DAMPIP)
AR 672-20	Incentive Awards
DR 1180-1-1	Construction Contract Modification
EP 11-1-3	Value Engineering Workbook
ER 5-7-1	Project Management
ER 37-2-10	Accounting and Reporting - Civil Works Activities
ER 37-34-5-10	Accounting and Reporting - Military Activities
FAR Part 48	Value Engineering

1.3 **PRECONCEPT SUBMITTAL REQUIREMENTS**. VE Studies will not be performed on preconcept submittals. Any studies of project criteria will be performed by the Savannah District VE Officer (VEO).

1.4 **CONCEPT/EARLY PRELIMINARY (35%) DESIGN SUBMITTAL REQUIREMENTS**. VE Studies for concept/early preliminary design submittals will be performed during the design review period. Studies shall be scheduled to begin on the day after design submittals are scheduled to be received by the study group. Results of the studies shall be received by the Savannah District at the same time that design review comments are received and coordinated. Once the VE suggestions to be adopted are approved by the User, then the design A-E or the inhouse (IH) designers and Project Manager (PM) will determine if the approved items are outside the original scope for design services. If so, a modification to the contract will be issued prior to the incorporation of the items with the final design. Start of final design will not necessarily have to wait on the processing of a modification if other nonrelated work can be started.

1.5 **SIXTY PERCENT (60%) SUBMITTAL REQUIREMENTS**. Normally, VE Studies will not be performed for a project with a requirement for a 60 percent submittal. The design does not stop at the 60 percent stage. The limited submittal is for a prefinal check on the cost and functional layout. If a VE Study is performed, the design A-E or the IH design team is to continue with their original effort without interruption even though the results of the VE Studies may result in lost design effort.

1.6 **PRELIMINARY (60%) DESIGN SUBMITTAL REQUIREMENTS**. Remarks concerning concept/early preliminary design are applicable to preliminary designs.

1.7 **FINAL (100%) DESIGN SUBMITTAL REQUIREMENTS.** VE Studies will generally not be performed on final design submittals. If studies are made, they will be due to the project cost being over the budget or due to failure to perform VE Studies earlier or due to a reduction in the programmed amount during the final design phase. Remarks concerning concept/early preliminary design will be applicable to final design. If VE findings are small in scope, the necessary changes or additions may be incorporated during the corrected final period. If VE findings have a major impact on the design, then a contract modification to include a contract time extension will be necessary.

1.8 **CORRECTED FINAL DESIGN SUBMITTAL REQUIREMENTS.** VE Studies will normally be performed prior to the corrected final design submittal. If a study is required later, special arrangements will have to be determined jointly by the PM and the VEO.

1.9 **VE VERSUS DESIGN.** VE encompasses a "new look" by a SECOND TEAM approach which objectively analyzes a system and its functional purpose and its interface with other systems to achieve the required function at least cost commensurate with its useful life and time frame. The prime purpose of this analysis is not to find fault or tear down the original designers, but rather to determine if the function is actually worth the cost. A comprehensive functional analysis study to identify high cost-low worth or low value items and/or entire systems is essential to an organized VE team approach. It can be said that the VE functional study and SECOND TEAM approach make the difference. Since VE augments normal design efforts, the A-E or the IH design team is compensated for his "extra special effort" according to the level of effort required to perform such service. Based on experience, the expected cost-benefit ratio is generally 1 to 30 or greater. The subject of additional design fees to incorporate VE alternatives will be considered and negotiated on a case-by-case basis.

1.10 **BEFORE THE VE METHODOLOGY CAN BE APPLIED.** Items for the building, process and production equipment, site work, site utilities, and support features of potentially "high cost and low worth" must be isolated. This identification process is the "art" of the VE approach. There are some 3,000 to 5,000 cost items involved in a modern facility. To find those few items or areas that represent the bulk of unnecessary costs is not easy. As part of the VE process, a cost model to identify the component costs must be prepared and included in the VE report.

1.11 **SCOPE OF WORK.** VE service shall include a VE analysis of the entire design package. The Value Engineering Study (VES) may be conducted on any of the design submittals shown on EXHIBIT I-C-1, and shall consist of a minimum of one 40-hour team study by a multi-discipline team of professionals normally meeting on five consecutive work days. The study group will follow the five-step job plan (see paragraph 1.17) as recognized by the Society of American Value Engineers (SAVE). A VES Report No. 1 shall encompass the recommendations of the VES team with detailed "BEFORE" (as designed) and "AFTER" (VE alternative) cost estimated life-cycle cost considerations with calculations, sketches, and isometrics as necessary. A VES Report No. 2 will be a summation of those items that were accepted by the Government and which shall be incorporated into the final design package. The Value Engineering Executive Report (Brief), EXHIBIT II-C-1, shall be attached as the first page of each of the reports described above. A formal oral presentation to the design A-E or the IH design team and to the Government will be required as delineated under paragraph 1.15 and 1.20 of these instructions.

1.12 **VALUE ENGINEERING STUDY SERVICES.** They shall be performed in accordance with the schedules set forth in paragraph 1.20 of these instructions.

1.13 **ESTABLISHMENT AND APPROVAL OF THE VE TEAM.** To be cost effective, VE analysis necessitates that the VE effort be performed by a separate or independent firm or group of professional persons not associated with or in the regular employment in the same firm or firms performing the original design. VE services shall be performed by a second team of experienced professional designers having complete independence from the original design team which prepared the original plan and specifications. These VE services shall be performed by a qualified firm or persons having Certified Value Specialist (CVS) credentials that qualify them to perform such services. In all situations, the team leader shall be responsible for and shall select his own team members to meet the foregoing requirements and qualifications.

1.13.1 *Members*. The VE team size shall be as required to provide VE expertise in all design disciplines included in the original design. However, in instances where a discipline has little impact on the total project cost and/or contributes an insignificant design portion of the overall project, a waiver may be granted only by the VEO. The VE team members shall not be the same personnel that are involved in the original design. This statement, however, is not to be construed or interpreted to rule out consultation and partnership between the design A-E and VE disciplines which are mandatory and vital to achieve a well-balanced and cost effective workshop as delineated in the A-E configuration for "review and response" under paragraph 1.15.2 of this guide.

1.13.2 *VE Experience*. All members of the team shall be completely knowledgeable of VE methodology. The VE Team Leader will be CVS certified by the Society of American Value Engineers or have completed the Corps of Engineers 40-hour VE Workshop or equivalent certified training approved by the Society of American Value Engineers with demonstrated professional leadership, experience, and qualifications. The team leader shall have had a minimum of 8 years combined college education and practical on-the-job VE experience. Practical experience is considered to have been gained primarily by being actively engaged as a consultant and leader in VE activities. All members of the VES team shall have prior VE experience and training, thereby making the 40-hour team study or workshop effective and accomplished within the shortest time frame.

1.14 **METHODS OF PROCUREMENT.** At the option of the Government, procurement for VE services shall be accomplished by one of the following two methods:

a. Design A-E Selects VE Firm. A list a professional team members by name (with alternate members if desirable) and their respective resumes representing the various disciplines to be covered (generally four or five) together with the certified (CVS) team leader's qualifications and discipline shall accompany the fee proposal and be made available for approval at the time of fee negotiations. The total VE fee submitted by the design A-E shall include the VE firm's fee for VE services along with the VE team's cost for travel and subsistence, if applicable, and the design A-E's fee for review and response time listed under paragraph 1.15.2 and study group requirements listed under paragraph 1.16. Subsequent changes or substitutions to the approved VE team configuration shall be submitted in writing to the VEO for approval.

b. Government Selects VE Firm. A list of professional team members (with alternate members if desired) and their respective resumes representing the various disciplines to be covered together with the certified (CVS) team leader's qualifications and disciplines shall be ascertained by separate Government contracts in response to CBD announcements. Approval of the VE firm will be exercised by selection committees utilizing the normal Government selection process. If this method is exercised by the Government, the total VE fee submitted by the design A-E shall be the designer's fee for review and response time listed under paragraph 1.15.2 of this guide and study group requirements listed under paragraph 1.16.

1.15 **VE AND A-E FIRM REQUIREMENTS.**

1.15.1 *Typical VES Team Requirements (Subcontracted VES)*:

a. Qualified Architect or Engineer/CVS Leader.

b. Structural Engineer.

c. Mechanical Engineer.

d. Electrical Engineer.

e. Civil Engineer.

f. On a case-by-case situation, Cost Estimating/Life Cycle Analysis and Drafting technician.

g. Obtain overview of original design from design A-E.

h. Site visitation (on a case-by-case basis).

i. At the termination of the VE Workshop, the VE Team Leader will make a formal presentation to the design A-E or the IH designers, the User and the Government. Fee is to be structured accordingly. See paragraph 1.15.2.

j. The VE Team Formal Presentation to the Government, design A-E, User, and others will be held at the project site, unless otherwise specified. It is anticipated that a maximum of two disciplines may be required. See paragraph 1.15.2 of this guide.

k. Preparing Report No. 1, including the following mandatory enclosure:

Executive Report format with summary of initial cost savings attached. The savings must be checked off as "proposed" in Report No. 1.

l. Other Requirements for VES:

(1) The specific level of effort will be developed for the VES team based on the scope and nature of the specific project and should consider other factors such as geographical location.

(2) The PM shall coordinate the VE workshop with the VEO, the User, the IH designers, the design A-E and the VE firm as far in advance as possible. The PM shall notify all participants by phone and in writing 2 weeks or more in advance of the workshop dates to allow for adequate scheduling.

(3) The Savannah District VE Officer shall be put on "Copy to" list of review conference minutes and any correspondence relating to VE.

1.15.2 *Typical Design A-E Effort for VE Briefing and Review Response of the VE Study*. The specific level of effort for support of the VES, review of the study results, participation in the Report No. 1 presentation, and preparation of Report No. 2, which will be prepared by the VE A-E, OVEST or the IH VE team, shall be based on the scope and nature of the specific project and should consider factors such as geographic location. The level of effort will be determined by negotiations.

1.15.2.1 First two days of the 5-day VE Team Workshop - VE disciplines meet in geographical location of the designer (A-E or IH), where the designers and the user present an overview of the original design to VES team. The design team includes only design A-E or IH disciplines, ie, Project Engineer Manager, Architectural, Structural, Mechanical, Electrical, and Civil, as appropriate.

1.15.2.2 At termination of the VE Workshop or upon completion of VE Report No. 1, the VE Team Leader makes a formal presentation of VE proposals to the designers, User, VEO and PM. The designer then joins and interacts in partnership with the VE firm by phone to supplement the VE effort in preparation for the VE Study Report No. 1 presentation. The design A-E or IH design team and the user shall review each VE change proposed by the VE Team Study and reach an agreement on acceptability. If the proposal, however, is totally unacceptable, it shall be included in the report as having been considered by the VE Team and the rejection shall be accompanied by specific technical reasons for the rejection. Upon a mutually agreeable understanding between the design A-E or the IH design team and the VE firm, the proposal may be indicated as "void" within Report No. 1 and then discussed at the oral presentation. Inasmuch as the designers may wish to include their response during the minutes covering the VE formal presentation, his response need not be in writing prior to the presentation.

1.15.2.3 The designers, VEO, PM, User and VE team shall meet at the Savannah District or other designated geographical location for the VE Study Report No. 1 review conference where the formal

oral presentation is made by the VE Team Leader. Resolution of VE proposals and concurrence or nonconcurrence is achieved at this scheduled meeting.

1.15.2.4 At the conclusion of the VE presentation of Report No. 1, the VE A-E, OVEST or the IH VE team shall prepare Report No. 2 which shall reflect the final decision of the Government's management team. Report No. 2 shall include EXHIBITS II-C-1 and II-C-2. EXHIBIT II-C-1 shall be checked as "Implemented." EXHIBIT II-C-2 is the VE Study proposal summary listing with minutes of the formal VE presentation attached. The Return on Investment (ROI) is to be completed by the Government VE Officer. EXHIBIT II-C-2 serves as a record of decision.

1.15.2.5 The total VE fee should take into account the mobility of the VE consultant so that the fee may be structured at the least cost to the Government.

1.16 **STUDY GROUP REQUIREMENTS AND ENVIRONMENT.**

1.16.1 *Information Required*. Prior to commencing a VE Study, the design A-E or the inhouse design team will make available, as far in advance as possible, the following information to the VES Team:

a. Two sets of full size drawings.

b. Two sets of detailed cost estimates.

c. Two sets of specifications.

d. DD Form 1391 and PDB or other project justifications and description of project pertinent to criteria as appropriate.

e. Basis of design.

f. Pertinent technical requirements including technical portions of design manuals that may constrain achieving needed function at lowest overall cost consistent with desired performance.

g. Design calculations (Mechanical, Electrical, etc.)

h. Boring logs and soil reports.

i. Life cycle cost calculations and energy studies based on 25-year life cycle and 10 percent annual discount rate unless otherwise directed.

j. Other project information such as catalog cuts, photographs of the site, design and criteria manuals, etc., that will be useful to the VES team during the study period.

1.16.2 *Environment*. The VES Team shall be assembled and isolated away from their normal work station in order to avoid daily interruptions such as phone calls, quick questions, brief meetings, etc., which tend to be very disruptive to studies of this type. If circumstances require it, an appropriate meeting room, motel room, etc., should be rented for the workshop to provide the following:

a. Room size at least 250 SF isolated from normal environment.

b. Adequate lighting for prolonged reading, writing, etc.

c. Four large tables with a minimum of eight chairs.

d. Proximity and access to telephones and duplicating machines.

e. Blackboard and/or flip chart.

f. Film projectors and screens as necessary.

g. Current estimating books, at least three-holed punch, scissors, scales, tracing paper, multi-color felt tip pens, loose-leaf notebooks, etc.

1.17 **BASIC REQUIREMENTS FOR VE.** The determination of use and aesthetic function(s) (both primary and secondary) is a requisite for all VE studies. Accordingly, VE studies shall be accomplished using a functional analysis approach. It should be noted that cost reduction actions cannot be labelled "Value Engineering" unless the action includes identifying the function, brainstorming to determine what else will do the job, and selecting the alternative that will perform the required function at the lowest total cost considering performance, reliability, quality, and maintainability. True VE concept shall be followed in the performance of the study. The key distinguishing features separating the "VE Job Plan Approach" from the general or normal design procedures, economic studies, and other cost reduction techniques are functional analysis, use of creativity to develop sound multiple alternatives, and the principles of maintaining the quality needed by the User. The five-phase VE Job Plan is as follows:

a. Information. For information gathering and identification of high cost - low worth functions. Define and analyze design, evaluate function, and establish worth. Note: Original design team is required to present the VE Team with an overview of original current design. The design team, VEO and PM shall attend.

b. Creative (Speculative) Phase. For brainstorming the generation of alternative ideas by means of creative thinking atmosphere and the withholding of judgment during this phase. The design team, VEO and PM shall attend.

c. Analysis (Judgment/Judicial) Phase. For evaluating and judging each alternative idea for merit and separating needs from desires. List basic advantages/disadvantages, compare, evaluate, refine, and select best alternative ideas for development of firm proposals. The design team, VEO and PM shall attend.

d. Development Phase. Fully develop and summarize best alternative ideas using accurate and realistic costs. Develop "before" and "after" cost comparisons with net savings. Discard alternatives that prove to be not cost effective or of low value. Only the VE team shall attend.

e. Presentation Phase. Prepare a formal presentation report in sufficient detail for the fully developed viable alternatives including view-graphs, savings, and recommendations needed to

implement each specific VE proposal. The report must be in sufficient detail to permit a technical review to evaluate the merits of each proposal. The design team, VEO, User and PM shall attend.

1.18 **REPORTS AND MINIMUM DOCUMENTATION REQUIREMENTS FOR VE.** The results of each VE Study performed on the project shall be documented as follows:

a. Reports and Minimum Documentation.

(1) EXHIBIT II-C-1 - Executive Report and contents page with summary of initial cost savings. EXHIBIT II-C-1 is mandatory for both Report No. 1 and Report No. 2.

(2) EXHIBIT II-C-2 - VE Study proposal summary listing with summary of initial cost savings. ROI to be completed by the Government VE Officer. EXHIBIT II-C-2 serves as a "Record of Decisions" and is mandatory for Report No. 2.

(3) Brief description of total project and project requirements with a copy of DD Form 1391.

(4) Brief summary of VE recommendations including initial and life cycle cost savings (provide "use" experience where material alternates are recommended - EXHIBIT II-C-3).

(5) Site plan, floor plan, and one elevation. Use 8-1/2 x 11 fold out.

(6) VE cost model of project plus bar graphs of subsystems.

(7) Each VE proposal will be described "Before and After VE" listing advantages and disadvantages. Also, each proposal will be accompanied with a detailed realistic cost estimate of savings.

(8) "Before" and "After" sketches and isometrics, as necessary, to clearly depict VE proposals.

(9) Life cycle cost analysis for energy proposals and other proposals, as appropriate, all in accordance with acceptable guidance. See EXHIBIT II-C-4 (25-Year Life, 10 percent Annual Discount Rate).

(10) Footnote new material and recommendations to change criteria.

(11) Complete five-step job plan of all work will be submitted as a glossary for reference (EXHIBIT II-C-3).

b. VE Report No. 1. This preliminary report shall be prepared by the VE Study Team and shall document the "VE Job Plan" and the results of the Value Engineering Study and services performed. The VE Team shall not be limited by the technical requirements and the design data, but shall challenge it except for the construction cost limitation which shall not be exceeded. Savings generated by criteria challenges and/or waivers to criteria shall be footnoted. All proposals and their respective original and proposed detailed estimates shall be documented in this report. Where clarification is deemed appropriate, the proposal shall be supported by rough-hand sketches, isometrics, drawings, descriptions, interface systems, specifications, and life-cycle cost to permit a thorough evaluation by the design A-E, the IH design team, VEO, PM and User. The report shall be

concise, yet informative in all respects. If the VE study of the design results in no recommended changes to the design, a detailed report indicating the effort and areas considered shall be submitted.

c. The Second and Final Report No. 2. This report will be prepared by the VES team and is a summation of those items that were accepted by the design A-E, the IH design team, VEO, PM and User. Report No. 2 shall be complete and final in all respects with all proposals resolved unless specifically reserved by the Government. Accordingly, Report No. 2 shall not list any items "Held in Abeyance" unless so directed. Description and summation of proposals shall include initial and life cycle savings for all proposals. Minutes of VE presentations are mandatory and shall be the responsibility of the VES team. A copy of the minutes shall be included in Report No. 2. The accepted proposals enumerated in Report No. 2 shall constitute a "Record of Decisions" on VE recommendations to be implemented if so directed by a separate order. Also, certain proposals that have been accepted in past VE studies will be accepted in future projects unless ruled otherwise by the Government.

1.19 **VE REPORT FORMAT.** Report No. 1 and Summary Report No. 2 (and other reports that may be called for in the scope of work) must be systematically assembled and must be short and concise, yet informative. VE reports shall be prepared and submitted on 8-1/2 x 11 bond paper and bound under hardback cover appropriately identified. Sketches may be 8-1/2 x 11 or fold out. Pages must be sequentially numbered in the lower right-hand corner to facilitate assembly. Report No. 1 shall be referenced by Report No. 2. There is no requirement to duplicate information from Report No. 1 in Report No. 2. The reports shall be computer generated in accordance with the latest guidance and shall follow the Value Engineering Support System (VESS) format.

1.19.1 *Numbering System*. If responding is necessary, the design A-E or the IH design team shall refer to the VE report using the same numbering system as in the VE report and in the same sequence as in the report submitted by the VE team. This will facilitate an orderly final review by all concerned parties.

1.19.2 *Alternatives*. All alternatives which are unacceptable to the design A-E, the IH design team, the User and the reviewers must be supported by reason for rejection, including technical, cost code, etc. All of the designers' calculations, both cost and technical calculations, should be included in an appendix. Also, all alternatives presented in the VE report, identified as Other Areas of Potential Savings, must be responded to in the same manner. Where possible, savings associated with these other areas should be included even though the savings are not shown by the VE Team in the VE Study.

1.20 **VE REPORT SUBMISSION SCHEDULES FOR ORAL PRESENTATION.** VE services are an integral part of the design process and, as such, shall be submitted in accordance with the schedules and required number of submittals set forth at the predesign or prestudy conference.

1.20.1 *Working Relationships*. Copies of Report No. 1 shall be mailed in time to be received and reviewed by the Government at least 2 weeks prior to the formal VE oral presentation. Report No. 1 shall receive concurrent review by the design A-E or the IH design team and the Government to include the Using Agency. The design A-E or the IH design team shall consult with the VES Team as necessary during the review time to identify problem areas or questionable VE proposals. It is envisioned that with a good harmonious relationship and the proper spirit of cooperation prior to the

formal oral VE presentation to the Government, differences will have been resolved and agreement and concurrence will have been reached between the design A-E or the IH design team and the VE team regarding acceptable cost effective VE proposals or alternative proposals. Accordingly, the Government will have to rule only on those proposals involving criteria changes and those few proposals where agreement is in doubt.

1.20.2 *Presentation and Report*. In all cases, the VE Team will be required to make a formal oral VE presentation (using aids such as flip-charts, view-graphs, sketches, isometrics, or other acceptable methods) to the Government, the design A-E, and the User within a 2-week period (unless indicated otherwise) immediately following the submittal of VE Report No. 1. View-graphs are particularly effective and are required for the formal on-board VE presentation. Prime A-E representatives shall attend the VE presentation unless otherwise scheduled. Copies of VE Report No. 2 will be prepared by the VES team and submitted following the oral presentation to the Government. It is particularly important that other cost effective suggestions that may evolve from attendees during the VE presentation to the Government be incorporated by the VES team in the VE Report No. 2.

1.21 **APPROVAL AND IMPLEMENTATION OF PROPOSED VE CHANGES.** The Contracting Officer may approve or reject in whole or in part any VE change and reasons for rejection shall be included in the minutes of the formal VE presentation and Report No. 2. The implementation of approved VE changes shall be the incorporation of the approved changes into the final design of the project only as directed by the PM and the Contracting Officer under the changes clause of the contract.

1.22 **GUIDANCE AND CONSULTATION.** Additional guidance for the VE job plan is contained in EXHIBITS II-C-3 and II-C-4. Any questions concerning VE reports, waivers, general guidance, etc., may be resolved by consultation with the Savannah District VE Officer and the Project Manager.

1.23 **SPECIFIC INSTRUCTIONS.** The VE proposals and ideas become the property of the Government and may be used on future contracts or designs without additional compensation to the A-E.

VALUE ENGINEERING

EXECUTIVE REPORT
US ARMY ENGINEER DISTRICT SAVANNAH

DATE_____

POTENTIAL ( ) STUDY CONTROL NO. VES_____
REALIZED ( )

PROJECT:

STATION/LOCATION:
LINE ITEM:
PROGRAM YEAR:
DESIGNER:
VES TEAM:
VES TEAM LEADER:_____

PROPOSED SAVINGS: $_____
ACCEPTED SAVINGS: $_____
ACCEPTANCE RATE: _____%

** TEAM STUDY COST: $_____
** REDESIGN/IMPLEMENTATIN COST: $_____
** REVIEW COST: $_____
** TOTAL VES COSTS $_____
** ROI SAVINGS/COST=

** CONSTRUCTION CONTRACT NO: DACA21-
** AWARD DATE:
** AWARD AMOUNT: $_____

** BY SAV DIST VEO

Exhibit II-C-1 .....

VE STUDY PROPOSAL SUMMARY

CHANGE DESCRIPTION	POTENTIAL SAVINGS	SAVINGS IMPLEMENTED	GENERAL COMMENTS AND/OR JUSTIFICATIONS FOR REJECTION
		0	
1. Use Precast Duct in lieu of Concrete Encased PVC	24,000		ACCEPTED WITH CONTRACTOR'S OPTION. Precast Duct with PVC liner will be allowed as a contractor option. Manhole to manhole duct must be of the same type construction. No saving anticipated.
3. Eliminate Supervisory Control and Data Acquisition System	435,000	435,000	
4. Use Lower Cost Supervisory Control and Data Acquisition System	20,000	0	
5. Eliminate Redundancy from Supervisory Control Data Acquisition System.	44,000	0	ACCEPTED
6. Eliminate Paper Insulated Lead Covered Neutral Cable and Provide Ethylene Propylene Rubber 15 KV Cable Throughout	18,000	0	REJECTED. Rejected in favor of 1-3 REJECTED. Rejected in favor of 1-3
7. Use Shielded 133 Percent Insulation 15 KV Ethylene Propylene Rubber Cable	94,000	94,000	
9. Delete Watt and Volt Ampere Reactive Metering from Substation Breakers	13,000 33,000	0 33,000	REJECTED. PILC cables will be required where new cables splices into existing PILC cables. ACCEPTED.
10. Use Wood Distribution Poles for Overhead in Lieu of Concrete			REJECTED. Watt/VAR data needed by PWC.
TOTALS	681,000	562,000	ACCEPTED ACCEPTED

Acceptance Rate = Savings Implemented / Potential Savings = $562,000 / 681,000 = 82.5%

*ROI = Savings / Study Cost = $562,000 =

*To be completed by VE Officer

Exhibit II-C-2

Value Engineering
WORKBOOK
(EP 11-1-3)

Project
Study Item

Study Team	Office Symbol	Telephone
Leader		
Members		

DISCIPLINES	
ARCH	SPECS
CIVIL	STRUCT
ELEC	_____
MECH	_____

US ARMY CORPS of Engineers

STUDY NUMBER	DATE

ENG Form 3986-R, Sep 85 EDITION OF JUN 76 IS OBSOLETE (Proponent: DAEN-EC)

Consultants

Name-Title	Address	Telephone

ENG Form 3986-R, Sep 85

INFORMATION
PHASE I

TECHNIQUES

Get all facts from the best possible sources.

Determine and evaluate the function of the present design.

Prepare a FAST diagram.

Obtain cost information.

Determine present design constraints.

USE GOOD HUMAN RELATIONS

KEY QUESTIONS TO ANSWER

WHAT IS IT?

WHAT DOES IT DO?

WHAT MUST IT DO?

WHAT DOES IT COST?

RECORD ALL INFORMATION

ENG Form 3986-R, Sep 85

PHASE I INFORMATION

Value Engineering
WORKBOOK

PRESENT
System or Design

Status of Project

Approval Authority Individual	Position/Organization	Telephone

Historical Data

Codes

ENG Form 3986-R, Sep 85

Special Criteria

Restrictions

Other

ENG Form 3986-R, Sep 85

FUNCTION ANALYSIS WORKSHEET

Place the name of the item being studied (What is it?) at the top of the table.

Indicate the component parts on the table.

List all the functions performed by the item (What does it do?) in the Function column. As indicated in the table,
a two work (verb-noun) description should be used.

Identify the item's function(s) as to basic "B" (What must it do?) and secondary "2d". The Expanation column can be used when necessary to add more detail on the function of the item.

List the quantity requirements for each component and the unit of measure.

Indicate the cost of each component and a total for the original design

ENG Form
3986-R,
Sep 85

PHASE I INFORMATION

Value Engineering
WORKBOOK

FAST Diagram Original Design

ENG
Form
3986-R, Sep 85

ENG
For
m
3986-R, Sep 85

SPECULATION

PHASE II

TECHNIQUES

Use creative thinking (group brainstorming).

Don’t let regulations or people control your thinking.

Eliminate.

Simplify.

Modify and/or combine alternatives.

USE GOOD HUMAN RELATIONS

KEY QUESTION TO ANSWER

WHAT ELSE WILL PERFORM THE BASIC FUNCTION(S)?

ENG Form 3986-R, Sep 85

PHASE II SPECULATION

Value Engineering
WORKBOOK

Ideas

BASIC FUNCTION: _____ _____
verb noun

Alternatives - List as many as possible.

ANALYSIS
PHASE III

TECHNIQUES

Use cost references.

Apply matrix.

Make sketches.

Consult experts.

Use your own judgement.

USE GOOD HUMAN RELATIONS

KEY QUESTIONS TO ANSWER

WHAT DOES EACH FEASIBLE ALTERNATE COST?

WILL EACH PERFORM THE BASIC FUNCTION(S)?

CRITERIA WEIGHING PROCESS INSTRUCTIONS

List functions, elements to be compared. (In this case-cost, maintainability, aesthetics, etc.)

Based on information obtained, compared "A" with "B" (cost vs. Maintainability) and place the letter representing the most important in the upper left hand block in the matrix. Add to this block the appropriate weight factor, i.e., 1-2-3-4-5. (The weight factor is determined by the speed of the decision, i.e., if rapid use 5, etc.)

Compare "A" to "C" (cost vs. aesthetics) in a similar manner and add the weight factor.

Compare "A" to each of the other elements, determining importance and weight.

When this is done, step to "B" and compare it, on a one-to-one basis, to each other letter element. Continue this process until every element has been compared to every other element.

After all elements have been compared, add the weight factors for each letter, both vertical and horizontal, and indicate the sum.

Then transfer, in descending order, the element with its associated weight to the ANALYSIS MATRIX.

ENG Form 3986-R, Sep 85

ANALYSIS MATRIX INSTRUCTIONS

Transfer the criteria evaluated in the CRITERIA WEIGHING MATRIX to the spaces above the letters a. through i.it is not necessary to use all the criteria evaluated since the previous evaluation may indicate minor importance. The criteria should be listed in descending order of weight.

Transfer the weight determined for criteria to the appropriate spaces below the letters a. through j.

Describe briefly the original design after 'Present Way.' List the alternative proposals in the spaces below the 'Present Way.'

In the upper left triangular shaped area of the blocks after the present and alternative ideas, place one of the numbers shown at the bottom of the page. This number indicates the performance of the idea relative to the desired criteria.

Multiply the weight (discussed in paragraph 2 above) by the performance evaluation number (discussed in paragraph 4 above) and place the answer in the space diagonally below. This will provide an evaluation of alternatives with the higher number being the more desirable.

Value Engineering
WORKBOOK

Analysis Matrix

BASIC FUNCTION

List the best ideas from ranking and comparisons techniques. Determine which one stacks up best against the desired criteria.

Desired Criteria									
Weight From Criteria Matrix	a	b	c	d	e	f	g	h	i
Present									Totals

Excellent-5 Very Good-4 Good-3 Fair-2 Poor-1

ENG Form 3986-R, Sep 85

PHASE III ANALYSIS

Value Engineering
WORKBOOK

Sketches
& Notes

ENG Form 3986-R, Sep 85

ENG Form 3986-R, Sep 85

DEVELOPMENT
PHASE IV

TECHNIQUES

Recommend specifics not generalities.

Gather convincing facts.

Spend as if your own.

USE GOOD HUMAN RELATIONS

KEY QUESTION TO ANSWER

WILL THE ALTERNATIVE(S) MEET ALL
NECESSARY REQUIREMENTS?

PHASE IV DEVELOPMENT

Value Engineering PROPOSED

ENG Form 3986-R, Sep 85

ENG Form 3986-R, Sep 85

ENG Form 3986-R, Sep 85
ENG Form 3986-R, Sep 85

PRESENTATION
PHASE V

TECHNIQUES

FAST diagram as communications tool.

Be brief, pertinent, convincing.

Remove roadblocks.

USE GOOD HUMAN RELATIONS

ORAL PRESENTATION
this presentation should include, but not be limited to, the following:

Identification of project studied.
Brief summary of problem (high cost, difficult ..... construction, et al.).
Description of original design.
Cost of original design.
Results of FAST (function analysis systems ..... technique).
Technical data supporting selection of the ..... alternative(s).
Cost data supporting the alternative(s).
Advantages and disadvantages and reasons for .....accepting alternative(s).
Sketches of before and after designs, clearly . depicting proposed changes (drawings marked to
show proposed changes are acceptable).
Problems and cost of implementation.
Estimated cost savings.
Acknowledgement of contribution by others.
Summary statement.

CONSIDERATIONS
People are:

Interested in performance first.
Influenced by the effect adoption of the proposal will have on their sphere of work.
Persuaded by the before and after part of the proposal
with advantages and disadvantages of each.

PHASE V PRESENTATION

Value Engineering Outline
WORKBOOK

ENG Form 3986-R, Sep 85

ENG Form 3986-R, Sep 85

IMPLEMENTATION

PHASE IV

TECHNIQUES

Provide assistance.

Correct misconceptions.

Minimize delays.

Schedule follow-up meetings.

Implementation Actions. (List actions required to implement each of the selected alternatives.)

Critical Items

Problems

Technical Evaluation. (Detail for each selected alternative any required test or analytical procedures that may be necessary to verify that the basic function(s), can be performed without decrease in necessary quality, maintainability, reliability, performance, and compatibility. If any tests or analysis have been performed, list results.)

Remarks

Remarks. (List all other actions necessary such as obtaining approvals, shop drawings, samples, operational tests and persons, groups or agencies to take action to complete acceptance of recommendations. Include any approval actions required at higher authority.)

ENG Form 3986-R, Sep 85

Value Engineering
PROPOSAL
(EP 11-1-3)

Project
Study Item

Study Team	Office Symbol	Telephone
Leader		
Members		

DISCIPLINES	
ARCH	SPECS
CIVIL	STRUCT
ELEC	_____
MECH	_____

US ARMY CORPS of Engineers

STUDY NUMBER	DATE

ENG Form 3986-R, Sep 85 EDITION OF JUN 76 IS OBSOLETE SAVINGS_____
(Proponent: DAEN-EC)

PRESENT

Value Engineering
PROPOSAL

Description

FUNCTION OF ITEM

VERB	NOUN
_____	_____
_____	_____
_____	_____
_____	_____

DESCRIPTION

ENG Form 3986-R, Sep 85

PRESENT

Value Engineering
PROPOSAL

SKETCH

PRESENT

Value Engineering
PROPOSAL

FAST
DIAGRAM

ENG Form 3986-R, Sep 85

PROPOSED

Value Engineering
PROPOSAL

Description

ENG Form 3986-R, Sep 85

PROPOSED

Value Engineering
PROPOSAL

SKETCH

ENG

Form 3986-R, Sep 85

PROPOSED

Value Engineering
PROPOSAL

FAST
DIAGRAM
(Use is Optional)

ANNUAL COMPOUND INTEREST TABLE

EFFECTIVE RATE (APR) = 10% BASE = 1.10

YEARS	PRESENT VALUE REVERSION OF 1 PW	PRESENT VALUE ORD. ANNUITY 1 PER PERIOD PWA
1	.909091	.909091
2	.826446	1.735537
3	.751315	2.486852
4	.683013	3.169865
5	.620921	3.790787
6	.564474	4.355261
7	.513158	4.868419
8	.466507	5.334926
9	.424098	5.759024
10	.385543	6.144567
11	.350494	6.495061
12	.318631	6.813692
13	.289664	7.103355
14	.263331	7.366687
15	.239392	7.606080
16	.217629	7.823709
17	.197845	8.021553
18	.179859	8.201412
19	.163508	8.364920
20	.148644	8.513564
21	.135131	8.648694
22	.122846	8.771540
23	.111678	8.883218
24	.101526	8.984744
25	.092296	9.077040
26	.083905	9.160945
27	.076278	9.237223
28	.069343	9.306567
29	.063039	9.369606
30	.057309	9.426914
31	.052099	9.479013
32	.047362	9.526376
33	.043057	9.569432
34	.039143	9.608575
35	.035584	9.644159
36	.032349	9.676508
37	.029408	9.705917
38	.026735	9.732651
39	.024304	9.756956
40	.022095	9.779051
41	.020086	9.799137
42	.018260	9.817397
43	.016600	9.833996
44	.015091	9.849089
45	.013719	9.862808
46	.012472	9.875280
47	.011338	9.886618
48	.010307	9.896926
49	.009370	9.906296
50	.008519	9.914814
51	.007744	9.922559
52	.007040	9.929599
53	.006400	9.935999
54	.005818	9.941817
55	.005289	9.947106
56	.004809	9.951915
57	.004371	9.956286
58	.003974	9.960260
59	.003613	9.963873
60	.003284	9.967157

Value Engineering
PROPOSAL

REMARKS

PROPOSED PLAN:

PRESENT PLAN:

FINANCIAL ANALYSIS

SUMMARY OF COST OF PRESENT DESIGN:

INITIAL COST $_____
OR
LIFE CYCLE COST $_____

COST OF PRESENT DESIGN $_____

SUMARRY OF COST OF PROPOSED DESIGN: (W/O IMPLEMENTATION COSTS)

INITIAL COST $_____
OR
LIFE CYCLE COST $_____

COST OF PROPOSED DESIGN $_____
GROSS SAVINGS (PRESENT MINUS PROPOSED) $_____

SUMMARY OF IMPLEMENTATION COSTS FOR PROPOSED DESIGN:

COST OF STUDY $_____
COST OF RE-DESIGN $_____
COST OF MODIFICATION $_____

TOTAL COST OF IMPLEMENTATION $_____

NET SAVINGS: (GROSS SAVINGS MINUS COST OF IMPLEMENTATION) $_____

ENG Form 3986-R, Sep 85